Uponor Combi Ports and Aqua Ports

EN Technical information

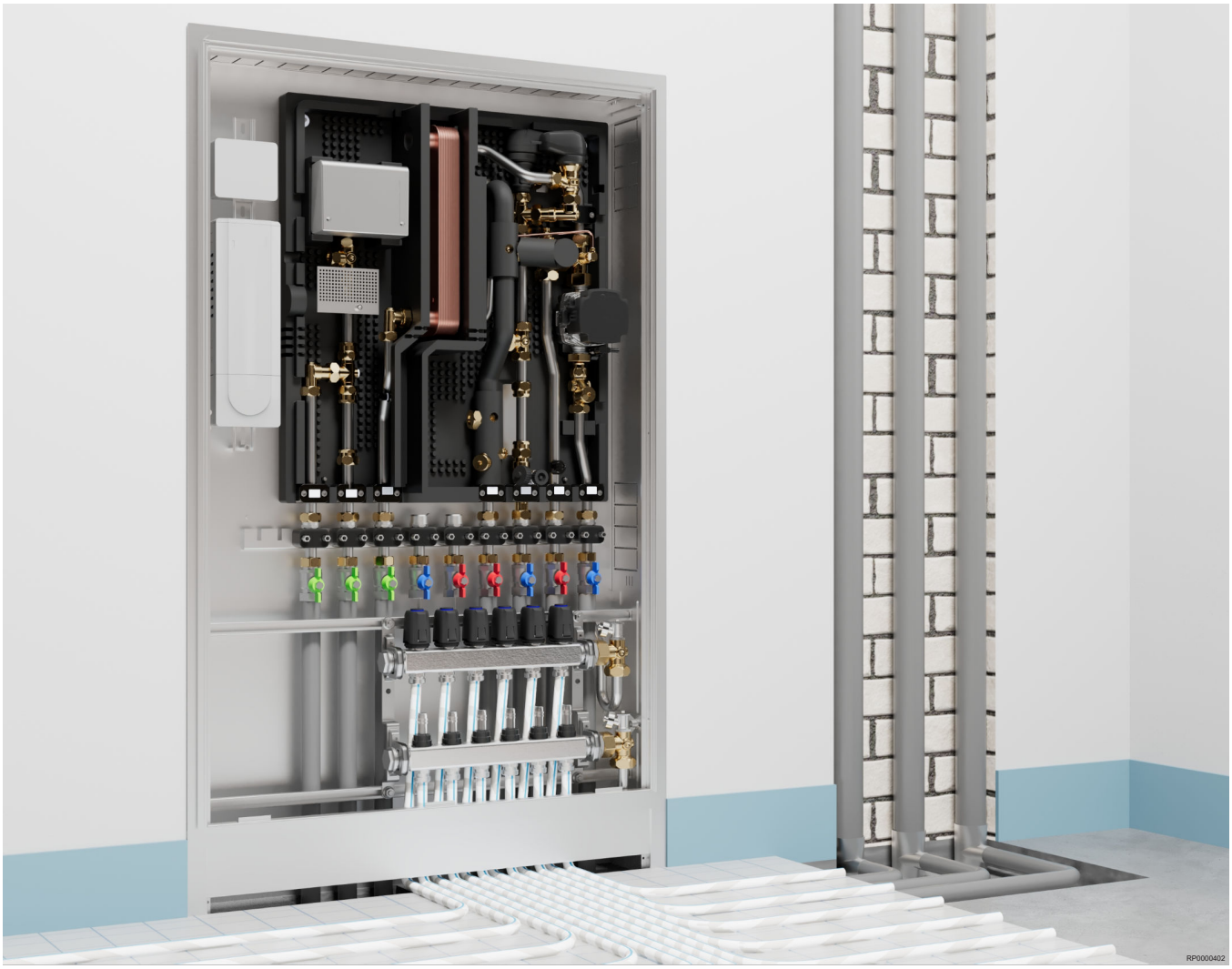

Table of contents

1 Copyright and disclaimer ... 3

2 General information ... 4

3 Benefits of decentral heat interface units ... 5

3.1 Comparison of a 2-pipe system with heat interface units and standard 4-pipe systems with a centralised water heating system ... 5
3.2 High energy efficiency with decentralised domestic-water-heating systems ... 5

4 Ensuring decentralised water quality – Drinking water hygiene without compromises ... 7

4.1 Buffer heat instead of domestic water storage ... 8

5 Operating conditions of plate heat exchangers in domestic water installation ... 9

5.1 Operating conditions ... 9
5.2 Water quality for heat interface units ... 9

6 Design guidelines and rules ... 11

6.1 Design and operate systems with Uponor heat interface units ... 11
6.2 Design of systems with Uponor heat interface units ... 12
6.3 Calculation example ... 12

7 Product overview ... 21

7.1 Uponor Combi Port and Aqua Port heat interface units ... 21
7.2 Overview of the components of the heat interface units ... 23

8 Consider for installation ... 26

8.1 General information ... 26
8.2 Finishing installation ... 27

9 Uponor Combi Port M-Pro ... 28

9.1 Operating principle (2pipe system) ... 28
9.2 Functional description ... 28
9.3 Types and components ... 29
9.4 Accessories ... 33
9.5 Hydraulic schemes ... 35
9.6 Technical data ... 39
9.7 Dimensional drawings ... 40
9.8 Performance diagrams ... 43

10 Uponor Combi Port M-XS ... 47

10.1 Operating principle (2pipe system) ... 47
10.2 Functional description ... 47
10.3 Types and components ... 47
10.4 Hydraulic schemes ... 49
10.5 Technical data ... 49
10.6 Dimensional drawings ... 50
10.7 Performance diagrams ... 50

11 Uponor Combi Port M-INS/Uponor Aqua Port M-INS ... 59

11.1 Operating principle (2pipe system) ... 59
11.2 Functional description ... 59
11.3 Types and components ... 60
11.4 Hydraulic schemes ... 61
11.5 Technical data ... 62
11.6 Dimensional drawings ... 63
11.7 Performance diagrams ... 63

12 Uponor Aqua Port M-XS ... 66

12.1 Operating principle (Domestic hot water preparation) ... 66
12.2 Functional description ... 66
12.3 Types and components ... 66
12.4 Hydraulic schemes ... 67
12.5 Technical data ... 67
12.6 Dimensional drawings ... 68
12.7 Performance diagrams ... 69

1 Copyright and disclaimer

This is a generic, European-wide document version. The document may show products that are not available in your location for technical, legal, commercial, or other reasons.

For any questions or queries, please visit the local Uponor website or speak to your Uponor representative.

“Uponor” is a registered trademark of Uponor Corporation.

Uponor has prepared this document solely for information purposes, images are only representations of the products. The content (text and images) of the document is protected by worldwide copyright laws and treaty provisions. You agree to comply with these when using the document. Modification or use of any of the content for any other purpose is a violation of Uponor’s copyright, trademark, and other proprietary rights.

While Uponor has made all effort to ensure that the document is accurate, the company does not guarantee or warrant the accuracy of the information. Uponor reserves the right to change the product portfolio and the related documentation without prior notification, in line with its policy of continuous improvement and development.

This is a generic, European-wide document version. The document may show products that are not available in your location for technical, legal, commercial, or other reasons. Therefore, check the Uponor product/price list in advance whether the product is deliverable in your location.

Always make sure that the system or product complies with current local standards and regulations. Uponor cannot guarantee the full compliance of the product portfolio and related documents with all local regulations, standards, or working methods.

Uponor disclaims all warranties related to the content of this document, expressed or implied, to the fullest extent permissible unless otherwise agreed or statutory.

Uponor is under no circumstances liable for any indirect, special, incidental, or consequential damage/loss that results from the use or inability to use the product portfolio and related documents.

For any questions or queries, please visit the local Uponor website or speak to your Uponor representative.

2 General information

When discussing the optimal hot water supply for buildings, everyone seeks an intelligent, efficient, and sustainable solution, which often leads to the question: What is the most suitable method? The most common approaches are centralised and decentralised hot water supply. With the Combi and Aqua Port thermal modules for single-family and multi-family homes, Uponor focuses on decentralisation. This approach provides clear advantages during the planning phase prior to actual installation, during operation, and in meeting the highest standards of safety, comfort, and hygiene.

Decentralised heat interface units are characterised by energy performance. They produce the necessary hot water only on demand, minimising energy costs, and can be easily combined with renewable energy sources. Uponor heat interface units offer a high level of customisation and prefabrication, leading to increased efficiency and superior quality on decentralised system construction sites. This reduces installation time/costs and material requirements, significantly shortening construction time. All processes, from design to implementation, can be simplified and accelerated, especially in cases of supply chain interruptions and shortages of skilled labour. By eliminating hot water stagnation in decentralised systems and reducing the total water volume, the risk of Legionella bacteria infection is significantly decreased, ensuring high-quality drinking water.

Uponor Combi and Aqua Port heat interface units are the ideal solution for hot water supply. They are energy-efficient and feature a high degree of prefabrication. They also meet the highest standards of hygiene and comfort for high-quality drinking water installations.

3 Benefits of decentral heat interface units

3.1 Comparison of a 2-pipe system with heat interface units and standard 4-pipe systems with a centralised water heating system

Centralised domestic-water supply, 4-pipe system

- This is a large-scale system[1)], on which the operator must do frequent quality checks.
- This system requires significant efforts in pipe networks, as warm domestic water lines and circulation lines are necessary, especially in multi-story buildings.
- High energy demand to keep the hygienic quality of the domestic water in compliance to the given standards.

1) in accordance with the German Domestic Water Gazette

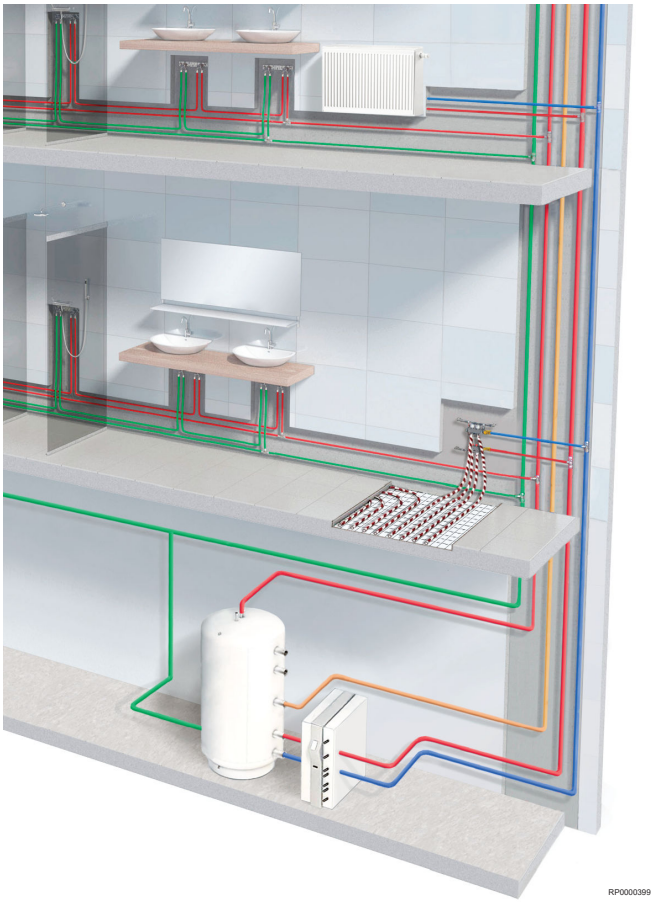

Decentralised domestic water heating system, 2-pipe system

- No recurring tests for legionella required as the domestic water is heated as it flows[1)].
- Efficient integration of renewable energy sources because of low return temperatures.
- No storage and circulation of warm domestic water required.

1) in accordance with the German Domestic Water Gazette

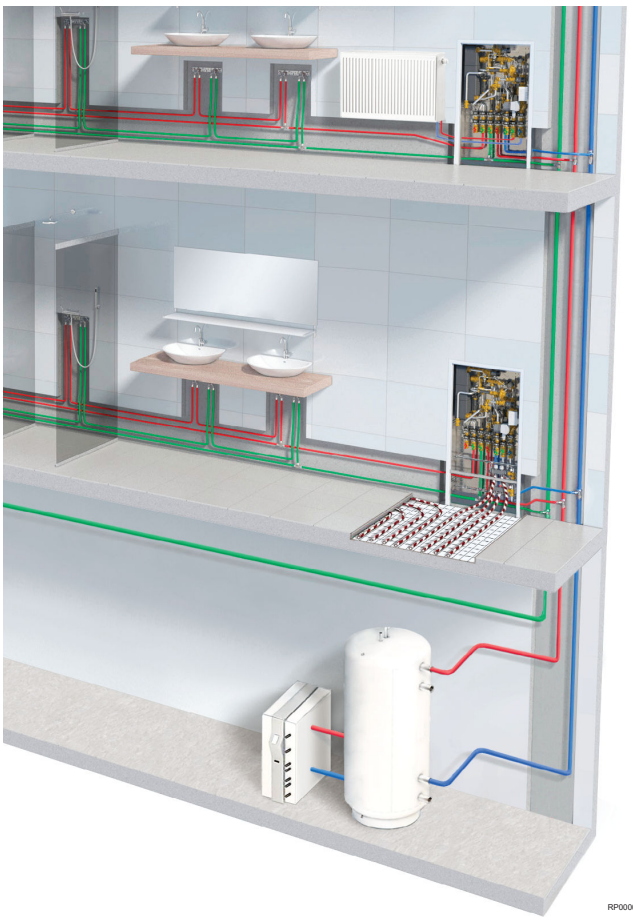

3.2 High energy efficiency with decentralised domestic-water-heating systems

Energy savings of 36% at decentralised domestic water heating with heat interface units

Even a 2-pipe network for the heat supply of heat interface units does not operate without standby and distribution losses; however, the final energy demand for the entire hot water preparation is about 36% lower than in systems with a central hot water storage tank and circulation, as shown by the results of the Allplan study **"Energy-Efficient Hot Water Preparation"** of the City of Vienna based on the energy flow diagrams. In particular, the possibilities for heating-side coupling of the heat supply, e.g., a surface heating system in the

apartments, with the demand-oriented supply of the plate heat exchanger via a 2-pipe network, result in:

- overall low return temperatures
- temperature reductions during low load phases
- reduction of auxiliary energy requirements

These factors enable additional savings potential for a more energy-efficient operation of hot water preparation without the loss of comfort.

Utilisation of renewable energy

In addition, decentralised heat interface units open up the use and feed-in of renewable energies, such as a solar thermal preheating of the buffer storage or a heat pump. Both systems can then be operated year-round with a high annual performance factor and low temperature lift. With so-called "hybrid stations" such as the Uponor Combi Port M Hybrid, a comfortable hot water temperature of 40-60 °C can also be achieved even at very low heating flow temperatures of 35-45 °C. In this process, the hot water preparation in pure flow-through operation initially takes place via a high-performance stainless steel plate heat exchanger. Due to the high volume flow and the low temperature difference of approximately 3-5 K, the cold water (PWC - Potable Water Cold) is heated to around 37 °C. The reheating to the desired hot water temperature depending on demand from 40 °C to 60 °C takes place via the integrated, electrically operated instantaneous water heater. The drinking water preheated to 37 °C in the heat exchanger requires, depending on the flow rate, an electrical power of 3-6 kW, for example, to raise the temperature to 45 °C. Here again, using surplus electricity from PV systems in summer is recommended to optimize self-consumption and thus the economic efficiency.

Energy consumption diagram, 2-pipe system

Decentralized domestic water heating with heat interface units:

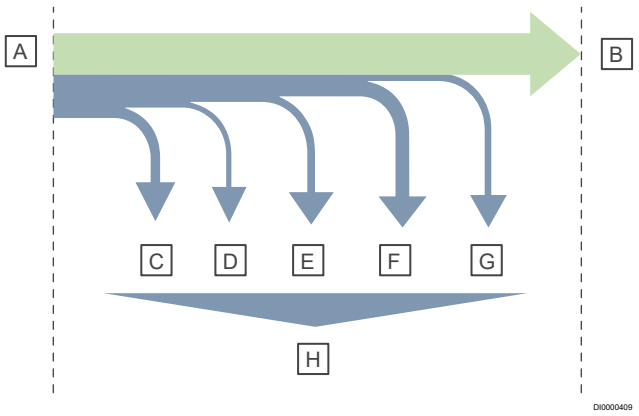

Item	Description
A	Input = output + losses = 166%
B	Output: domestic hot water energy demand: 100% = 12,7 kWh/m²a
C	Supply losses: 11%
D	Auxiliary energy consumption: 3%
E	Storage losses: 7%
F	Distribution losses: 40%
G	Other losses: 5%
G	Sum of energy losses (66%) = 8,4 kWh/m²a

Energy consumption diagram, 4-pipe system

Central domestic water heating with hot water buffer tank and circulation of the hot water distribution:

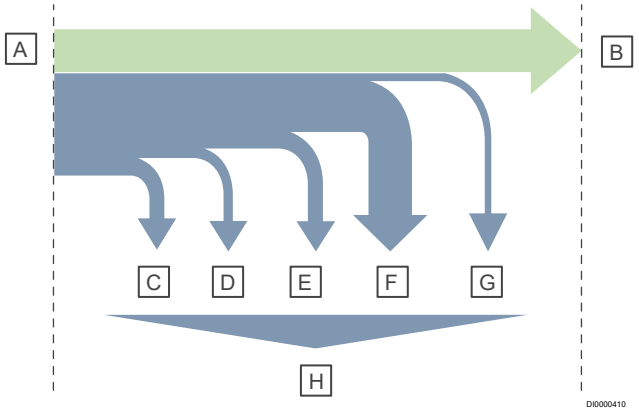

Item	Description
A	Input = output + losses = 250%
B	Output: domestic hot water energy demand: 100% = 12,7 kWh/m²a
C	Supply losses: 13%
D	Auxiliary energy consumption: 20%
E	Storage losses: 8%
F	Distribution losses: 114%
G	Other losses: 5%
H	Sum of energy losses (150%) = 19 kWh/m²a

4 Ensuring decentralised water quality – Drinking water hygiene without compromises

A key factor for flawless drinking water quality is the avoidance of long residence times and unfavourable temperature ranges. Decentralised heat interface units and loop-through installations offer the greatest possible safety to minimise the risk of contamination.

The requirements for the potability and purity of drinking water are clearly defined. The planning, construction and operational implementation are often associated with problems, as the numerous findings above the action level for Legionella repeatedly show. In addition, there is the increased demand from users to be able to draw a lot of hot water from the drinking water system at any time and with minimal delay.

For optimal drinking water hygiene, according to the generally accepted rules of technology, two criteria are particularly decisive:

- the regular water exchange throughout the entire piping system and
- the maintenance of the required temperatures in the cold water, hot water and circulation pipes.

To meet these requirements from the main water supply in the building to the tapping point, planners, installers and operators are jointly responsible for ensuring compliant and professional planning, installation and commissioning. What initially sounds complex and very theoretical becomes simpler for all those involved in construction if contamination risks are consistently excluded during planning. Those who opt for demand-based hot water production using the flow-through principle with decentralised heat interface units eliminate risks such as Legionella growth in cooler layers of central drinking water tanks or extensive circulation lines.

In decentralised fresh warm water technology systems, the thermal energy for hot water production is no longer stored in the drinking water itself, but in heating buffer tanks in a hygienically safe form. In addition, hot water distribution and circulation pipes, which can cause contamination due to insufficient insulation or poor hydraulic balancing, are no longer required in the building. For the hygienic distribution of hot and cold drinking water on the floors, a loop-through ring installation is recommended. This not only allows for small pipe diameters and water volumes, but also ensures the flow through of all parts of the system, regardless of which tap points are used frequently, infrequently, or not at all.

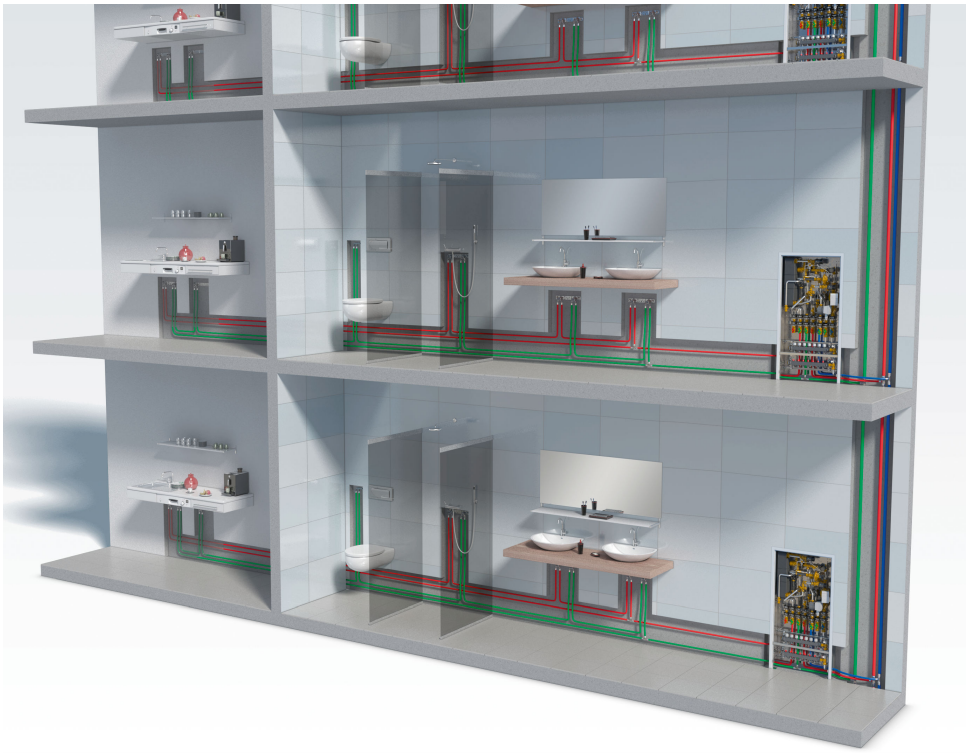

RP0000398

In this way, stagnation in the distribution across floors is avoided under normal consumption behaviour. In residential buildings, each unit has its own heat interface unit for hygienic hot water preparation. A high-performance heat exchanger not only provides high hot water comfort but also low return temperatures, which in turn contribute to the energy-efficient operation of the heating system. It is also important for the operator that simple consumption recording is possible in each unit via the directly integrated water and heat meters. The apartment stations are connected directly to the heating supply in the 2-pipe system, so that central hot water and circulation pipes in the service shafts are eliminated.

This reduces the supply shafts by approximately 40 %. This avoids radiation losses from the pipes as well as the no longer required drinking water storage. In this way, not only the energy efficiency increased, but the stagnation in the cold water line is also avoided, which is much more important in terms of hygiene. In contrast to central hot water generation, there is a significantly larger water exchange here, as the cold water pipe covers the total demand (hot and cold) of the connected units..

4.1 Buffer heat instead of domestic water storage

Decentralised fresh water technology can effectively counter the risk of contamination of drinking water in storage tanks. Decentralised fresh water stations, wherever possible, completely avoid circulation or storage of heated drinking water. Only as much drinking water as the user currently needs is heated to tap temperature. The energy required for this is stored not in the form of drinking water, but in buffer tanks using heating water as the medium (refer to the country-specific regulations and standards).

5 Operating conditions of plate heat exchangers in domestic water installation

5.1 Operating conditions

When operating heat interface units, strong pressure surges (e.g. from valves, pressure boosting systems, etc.) must be avoided. With valves or fittings that have very short opening and closing times, strong pressures occur repeatedly at short intervals, which impermissibly exceed the specifications of the local standards.

To operate heat interface units, obey the following specifications:

- When a valve closes, the positive water-pressure surge must not be more than 2 bar.
- When a valve opens, the negative water-pressure surges must not be less than 50 % of the flow pressure that occurs after the valve is open.

Note

Not to obey these specifications can cause damage on the components of the heat interface unit, e.g. of the heat exchanger, like cracks in welded seams or deformation of the heat exchanger plates.

The technical literature on this subject recommends to optimise pressure ratios at the point of origin. One example of this technical literature is process sheet W 303 from the German Technical and Scientific Association for Gas and Water (DVGW). Read EN 806-5 and country-specific regulations andstandards before you operate the system or do maintenance on the system.

Note

Before the use of heat interface units, you must get a water analysis for the place of use. The water analysis is important for the stainless-steel plate heat exchanger. You can get the water analysis from the local water provider.

5.2 Water quality for heat interface units

Uponor heat interface units are only assembled with plate heat exchangers made from stainless-steel.

Heating side

Obey the country-specific regulations and standards that are related to the quality of the heating water (e.g., VDI 2035).

Domestic water side

The brazed plate heat exchangers are made up of embossed stainless steel plates 1.4404/1.4401 or SA240 316L/SA240 316. They are available in two quality grades:

- Stainless steel plate heat exchangers: vacinox-brazed or copper-brazed (CB)
- Stainless steel plate heat exchangers with a silicon dioxide coating (Sealix®) (SX)

Before using the heat exchangers, the building services planner or installation company must check during system planning that corrosion protection and limescale formation have been adequately addressed in accordance with local regulations (e.g., DIN 1988-200 paragraph 12.3.2) and the available domestic water analyses.

This verification must cover the following points:

- Selection of material
- Corrosion-related changes in drinking water quality
- Execution of the installation
- Consideration of the anticipated operating conditions

Braze material/ coating heat exchanger			**Sealix**	**Copper**	**Vacinox**
Water component:	**Abbreviation**	**Unit**	**Allowed concentration**		
Total ammonia	NH3/NH4	mg/l	2 - 20	<2	No limit[1)]
Sulphide	S^{2-}	mg/l	<1	<1	<7
Sulphate	SO_4^{2-}	mg/l	70 - >300	<100	<400
Total water hardness	°dH	°dH	See Chapter "Calcium precipitation in water depending on temperature"		
Chloride	Cl^-	mg/l	See Chapter "Limit values for chlorine content in heating water"		
Free chlorine	Cl_2	mg/l	<1 (max. 5h)	<0,5	<0,5
Saturation index (SI)	SI	-	No limit[1)]	-0,2 - +0,2	No limit[1)]
pH value	pH	-	6 - 9	7 - 9 with consideration of SI	6 - 10
Conductivity	-	µs/cm	<10 - >500	10 - 500	No limit[1)]
Total organic carbon (TOC)	-	mg/l	No limit[1)]	<1,5	No limit[1)]
Hydrogen sulphide	H_2S	mg/l	<0,05	<0,05	No limit[1)]
Free carbondioxide (aggressive)	CO_2	mg/l	<5 - >50	>20	No limit[1)]
Nitrate	NO_3^-	mg/l	-	<100	No limit[1)]
Hydrogencarbonate	HCO_3^-	mg/l	-	>300	No limit[1)]
Ratio of Hydrogencarbonate and Sulphate (HCO_3^-/SO_4^{2-})	-	mg/l	-	>1	No limit[1)]
Iron	Fe	mg/l	No limit[1)]	<0,2	<0,2
Manganese	Mn	mg/l	No limit[1)]	<0,1	No limit[1)]
Oxygen	O_2	mg/l	<0,1	<0,1	<0,1
Filterable substances	-	mg/l	<10	<30	<30
Nitrite	NO_2^-	mg/l	No limit[1)]	<0,1	No limit[1)]

[1)] Refer to the local domestic water quality guidelines.

Note

Some combinations of substances can cause problems even when the individual limit values are within the specified limits. For more information, refer to the local domestic water quality guidelines.

Calcium precipitation in water depending on temperature

Obey the limit values for calcium precipitation:

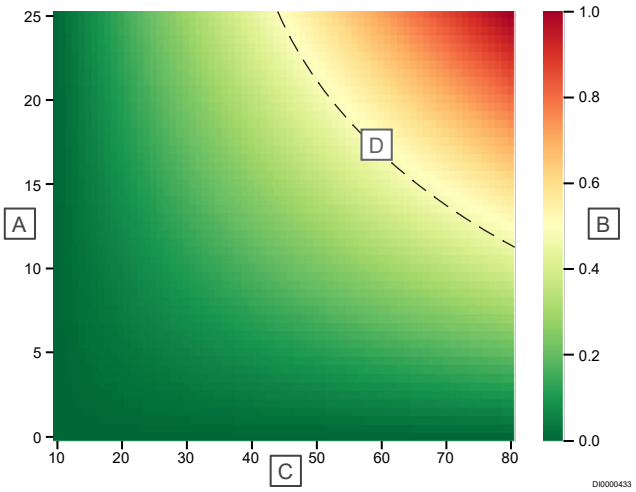

Item	Description
A	Total Hardness [°dH]
B	Lime precipitation (relative)
C	Temperature [° C]
D	Decalcification or other water treatment is recommended

Limit values for chlorine content in heating

The limit values for the chlorine content in the heating water shown below can vary with the operating conditions.

Temperature dependent limits "Sealix"	Value
<30 °C	<300 mg/l
30-60 °C	<150 mg/l
>60 °C	50-100 mg/l
60-<80 °C	<300 mg/l
80 °C	300 mg/l (lab conditions for Sealix)

Temperature dependent limits "Copper/Vacinox"	Value
20 °C	Max. 800 mg/l
25 °C	Max. 600 mg/l
50 °C	Max. 200 mg/l
100 °C	Max. 0 mg/l

6 Design guidelines and rules

6.1 Design and operate systems with Uponor heat interface units

There are numerous regulations governing the design and construction of installations, as well as their operation. A brief selection of keyregulations and rules are summarised below.

German Domestic Water Gazette

This Official Gazette draws a fundamental distinction between large-scale systems and small-scale systems. For heat interface units, the requirements for small-scale systems apply.

Section 8 of the German Domestic water

In Section 8, a "large-scale domestic water heater" is specified as a system with a:

1. storage-type domestic hot water heaters or central instantaneous domestic hot water heaters, each with a capacity of more than 400 litres, or
2. a capacity of more than three litres in at least one pipe between the outlet of the domestic hot water heater and the tap; the capacity of a circulation pipe is not taken into account. Such systems in single-family or two-family houses do not count as large-scale domestic hot water heating systems.

DVGW Worksheet W 551, 2004 edition

In addition, DVGW Worksheet W 551 should also be mentioned here. No requirements for domestic water supply units are specified here either within the framework of the 3-litre rule.

Small-scale domestic water heaters

"Small-scale domestic water heater" are all systems with storage-type domestic water heater or central instantaneous domestic water heaters in:

- Detached and semi-detached houses, regardless of the capacity of the hot water heater and the pipe run.
- Systems with domestic hot water heaters with a capacity of 400 litres or less and a capacity of three litres or less in each pipe between the outlet of the domestic hot water heater and the tap.
- This does not take into account any circulation piping.

Requirements for domestic water heaters

Decentralised instantaneous domestic hot water heaters can be used without any further measures if the volume of pipework downstream of the instantaneous domestic hot water heater does not exceed 3 litres.

The below table shows what a water volume of 3 litres in the pipes means:

Pipe volume: Threaded pipes in accordance with DIN 2440

Item	3/8"	1/2"	3/4"
Nominal diameter [mm]	10	15	20
Outer diameter [mm]	17,2	21,3	26,9
Contents [l/m]	0,123	0,201	0,366
Installable length up to 3 litres [m]	24,39	14,92	8,19

Pipe volume: copper pipes

Item	Ø12 x 1 [mm]	Ø15 x 1 [mm]	Ø18 x 1 [mm]	Ø22 x 1 [mm]
Inner diameter [mm]	10	13	16	20
Content [l/m]	0,079	0,133	0,201	0,314
Installable length up to 3 litres [m]	38	22,5	14,9	9,6

Pipe volume: Uponor pipes

Item	Ø14 x 2 [mm]	Ø16 x 2 [mm]	Ø20 x 2,25 [mm]	Ø25 x 2,5 [mm]	Ø32 x 3 [mm]
Inner diameter [mm]	10	12	15,5	20	26
Content [l/m]	0,079	0,133	0,189	0,314	0,531
Installable length up to 3 litres [m]	38	26	15,9	9,6	5,6

Heating systems

The design and installation of the heating system must be carried out in accordance with accepted engineering practice and the DIN standards and VDI guidelines described below. Where applicable, the relevant country-specific regulations or standards must be observed.

The following list is not exhaustive, it only shows some examples for Germany:

- EN 12828 Heating systems in buildings - Design for water-based heating systems
- EN 806 Specifications for installations inside buildings conveying water intended for human consumption
- EN 12831 Method for calculation of the design heat load
- EN 12354-5 Estimation of acoustic performance of buildings from the performance of elements – Part 5: Sounds levels due to the service equipment
- EN 6946 Thermal resistance and thermal transmittance. Calculation methods
- GEG Buildings Energy Act

We recommend the installation of sludge separators and air separators. The expansion tank must be adapted to the system and adjusted accordingly.

Further regulations:

- Regulations of local water supply companies
- All applicable and equivalent country specific regulations and standards.

6.2 Design of systems with Uponor heat interface units

Simultaneity

The design of heating pipe networks with fresh water stations for decentralised hot water supply differs significantly from those intended solely for space heating. This is because of the need to account for the simultaneous demand for hot water.

Similarly to the calculation of peak flow rates for the cold and hot water supply in the building, the simultaneous nature of water draw-off must also be taken into account when sizing two-pipe heating pipe networks. There are specifications established in the market that have been developed based on measurements and calculations. In German literature, you can find the simultaneity approach for housing construction from the Technical University Dresden. VDI guideline 2072, "Heat transfer station with water/water heat exchangers for continuous-flow water heating", contains equivalent specifications. The following diagram compares both envelopes.

Simultaneity factors for heat interface units with domestic water heaters based on the continuous-flow principle

Characteristic curve of the simultaneity factor in accordance with different guidelines, VDI 2072 and Dresden University of Technology:

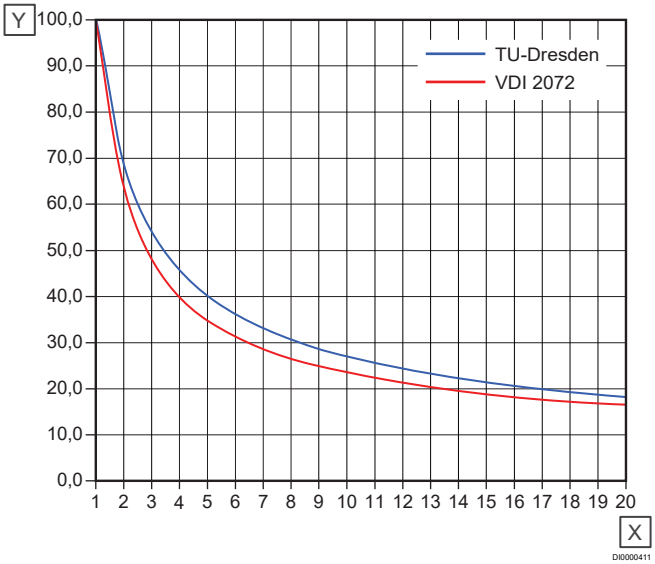

Item	Description
X	Number of identical residential units [pcs]
Y	Simultaneity [%]

6.3 Calculation example

The below parameters are essential for the calculation:

- Necessary functions of the heat interface unit, for example: Waterheating (PWH), radiator heating (RC), underfloor heating (UFH) or underfloor heating/cooling (UFH/C)
- Type of system, for example: 2-pipe or 4-pipe system
- Flow temperature of the system, for example: 65 °C, 55 °C or 38 °C
- Temperature spread of the system, for example: Assumption for PWH or PWH + RC 20 K or PWH + UFH 30 K
- Necessary tapping capacity of the heat interface unit
- Target hot water temperature in relation to the flow temperature, for example: heat PWC 10 °C to PWH 50 °C when the heating supply is at 65 °C
- Heating output per residential unit
- The cold water pressure available

Selected functions and parameters to calculate the example:

- 2-pipe system
- 3 risers lines each with 4 flats, 12 flats in total
- Functions of the heat interface unit: PWH + UFH
- Heating demand per flat: 3 kW
- Flow temperature: 65 °C
- Spread in the heating system: 30 K
- Cold water temperature: 10 °C
- Hot water temperature: 50 °C (water warming by 40 K)
- Tapping capacity of the heat interface unit: 19 l/min
- Simultaneity in accordance with VDI 2072

Selecting a heat interface unit based on the required functions and the tapping capacity

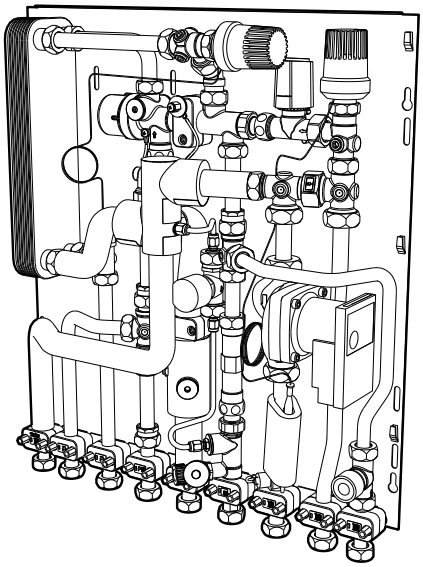

Requirements:

- Heat interface unit for 2-pipe system
- Functions: PWH + UFH
- Tapping capacity: 19 l/min when the heating flow temperature is 65 °C and the hot water temperature is 50 °C
- Maximum 10 kW heating output for UFH
- Selected heat interface unit: Uponor Combi Port M-Pro UFH 19

Determination of the required heating flow rate and the pressure drops for heating and domestic water based on the characteristic curve diagrams

Cold water warming 40 K (10-50 °C)

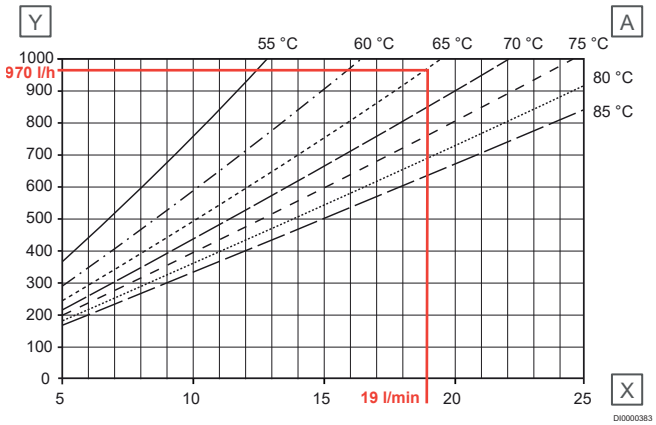

Item	Description
A	Primary heating supply temperatures
X	Tapping capacity [l/min]
Y	Primary heating demand [l/h], max. 1000 l/h

At a tapping capacity of 19 l/min, a heat flow temperature of 65 °C and a domestic hot water temperature of 50 °C, a heating water flow rate of 970 l/h is necessary. When designing the station's individual supply pipe, only the heating flow rate for hot water productionis taken into account.

Tapping capacity 40 K (10-50 °C)

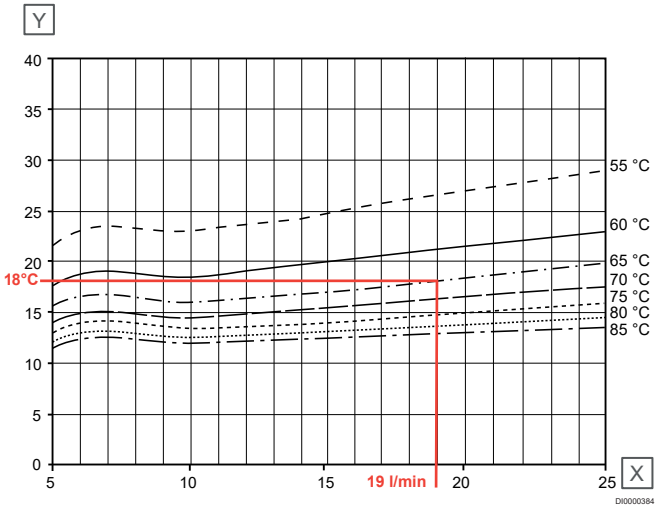

Item	Description
X	Tapping capacity [l/min]
Y	Return temperature [°C]

At the maximum tapping capacity of 19 l/min, the return water temperature is 18 °C. If the flow rate is reduced, the return temperature drops even further. During normal operation (PWH + UFH) a mixed temperature is established.

Heating side (primary)

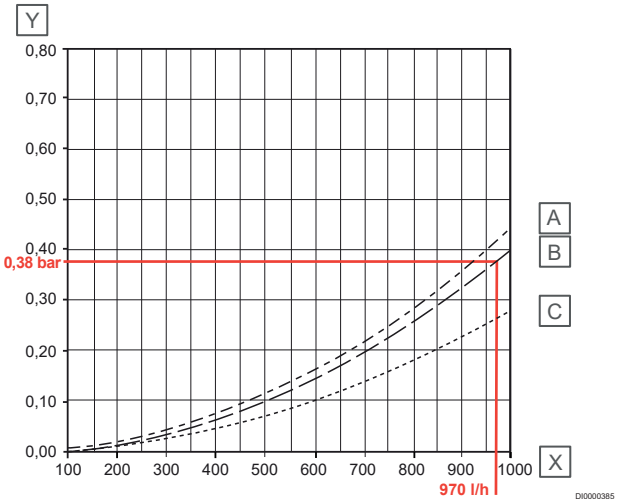

Item	Description
X	Primary heating demand [l/h], max. 1000 l/h
Y	Pressure drop [bar]
A	dP station including TL
B	dP station including differential pressure control
C	dP station

With a primary heating demand of 970 l/h the pressure drop is 0,38 bar. To determine the total pressure drop of the heat interface unit, the pressure drop of the heat meter must also be taken into account.

Domestic hot water side (secondary)

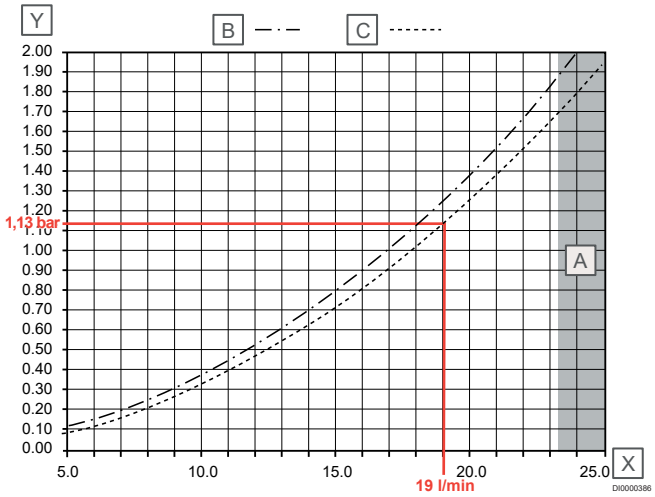

Item	Description
X	Tapping capacity [l/min]
Y	Pressure drop [bar]
A	Max range
B	dP station without throttle disc, including TL
C	dP station without throttle disc

With a tapping demand of 19 l/min the pressure drop is 1,13 bar. To determine the total pressure drop of the heat interface unit, the pressure drop of the throttle disc (approximately 0,5 bar) and the cold water meter must also be taken into account.

Calculation of the expected simultaneity in the pipe network

Calculate the simultaneity in accordance with VDI 2072 with the formula that follows:

$\varphi = 0{,}03 + (0{,}5/\sqrt{n}) + (0{,}47 \times (1/N))$

- φ = Simultaneity factor
- N = Number of flats with the same equipment

Note

The simultaneity calculation must always start at the end of each riser. At each additional joint connection (flat) a new simultaneity must be calculated.

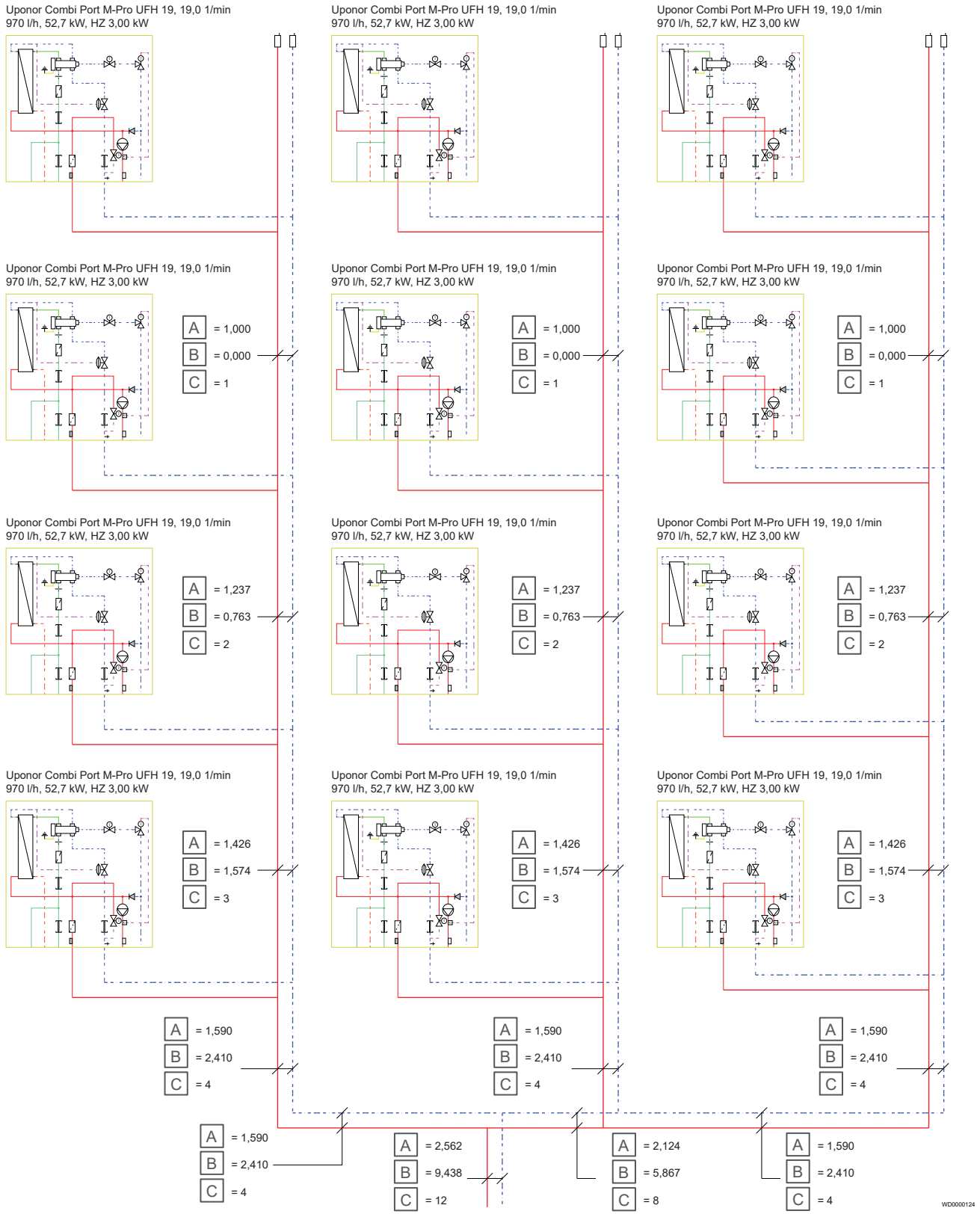

Item	Description
A	Calculated simultaneity factor (φ) for hot water preparation per pipe section

Item	Description
B	Calculated simultaneity factor (φ) for heating operation per pipe section

Item	Description
C	Total number of stations in that pipe section

Determination of the assumed total flow rates in the pipe network based on the previously determined simultaneities

The calculation of the total flow rates take into account the flow rates of the hot water supply at dt= 47 K and of the flow rates for underfloor heating at dt=30 K. The spread of the underfloor heating results from the temperature difference between the assumed primary flow of 65 °C and the assumed secondary return of the underfloor heating of 35 °C.

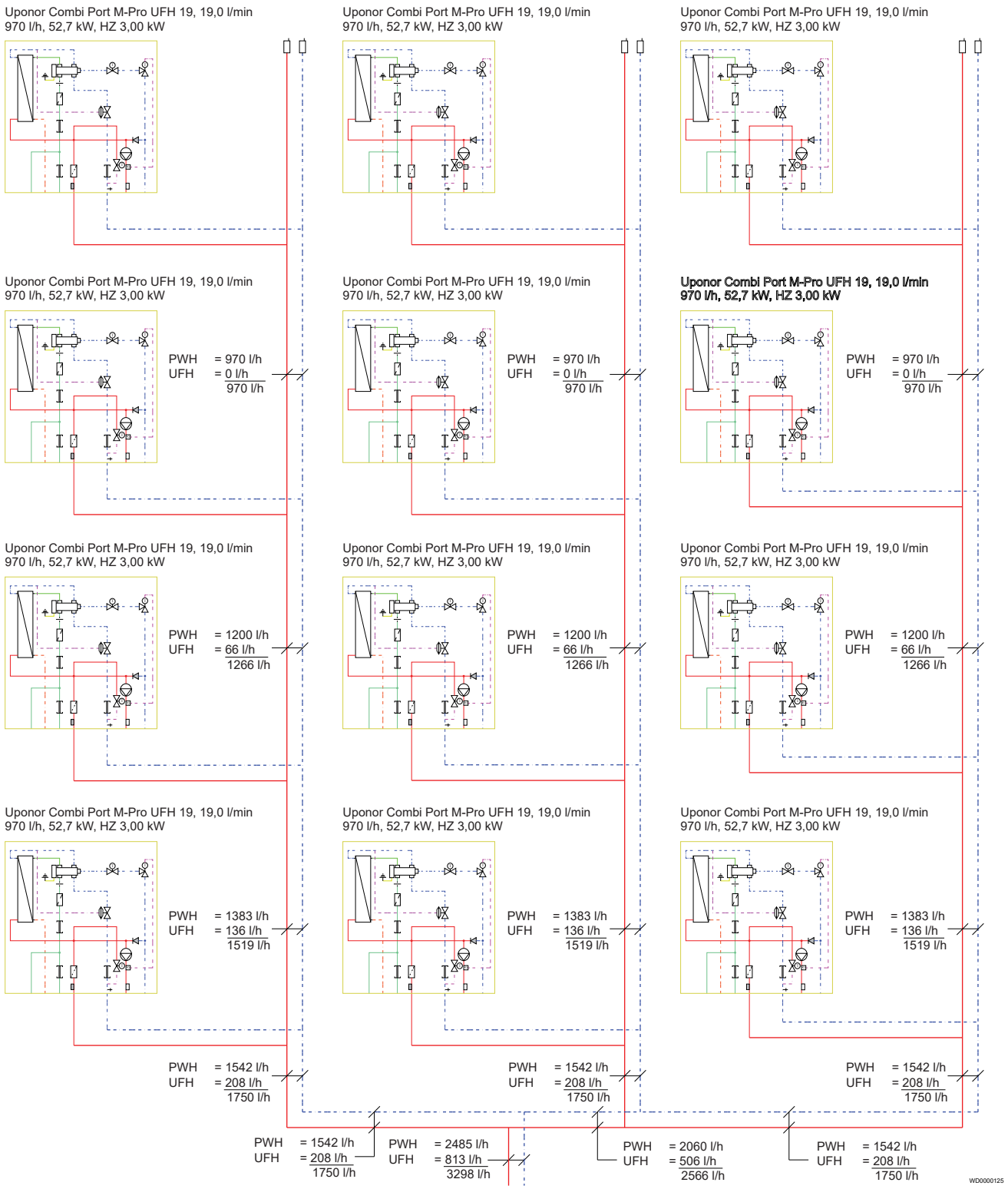

Determination of the pipe diameters and the pressure drops with the Uponor CAD planning software

Basis of design:

Item	Value
Heat source output	36 kW
Supply temperature	65 °C

Item	Value
Cold water warming by	40 K
Spread of primary heating	30 K
Building type (simultaneity table)	e.g. VDI 2072

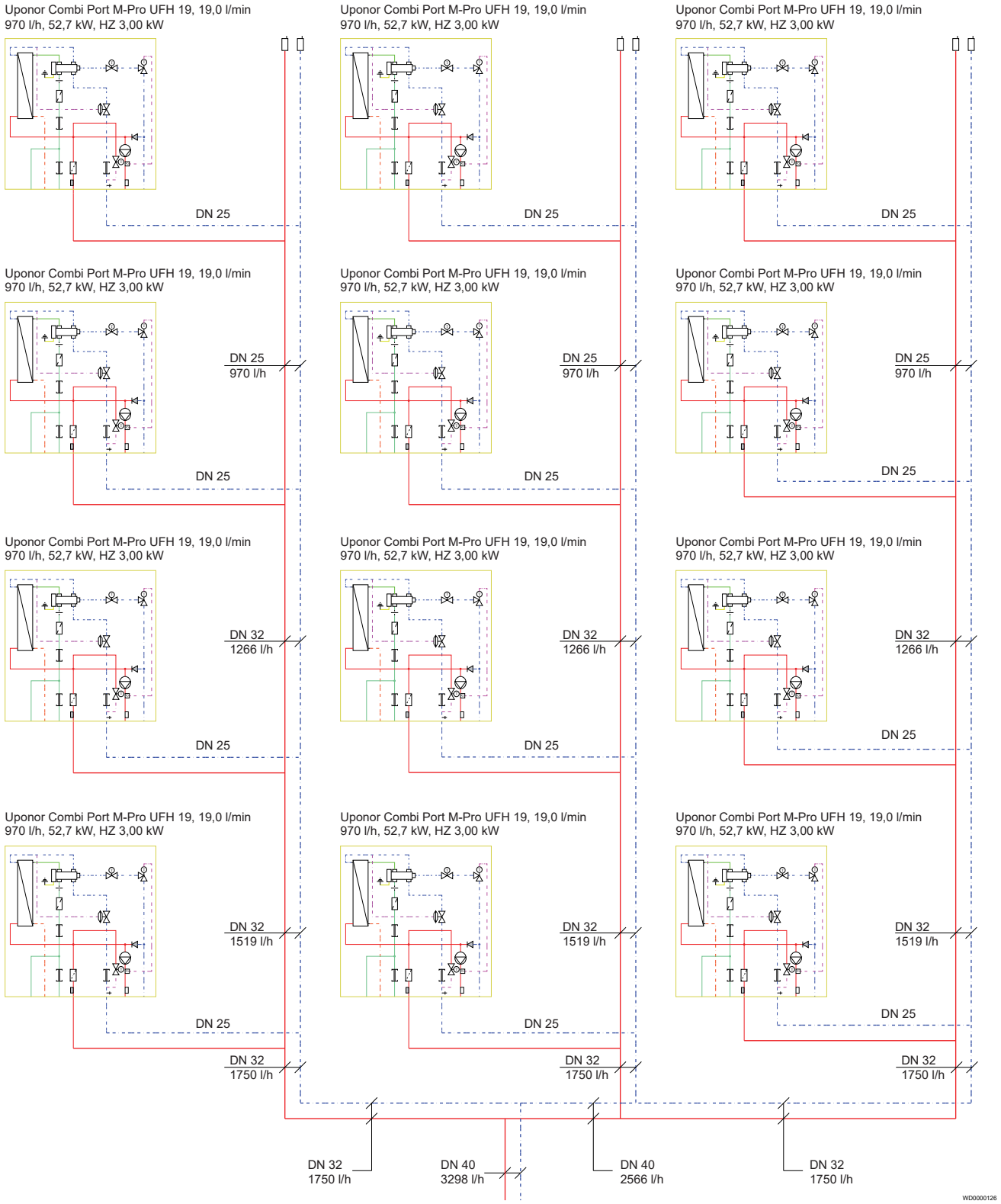
Uponor Combi Port M-Pro UFH 19, 19,0 l/min
970 l/h, 52,7 kW, HZ 3,00 kW
DN 25
DN 25
970 l/h
DN 32
1266 l/h
DN 32
1519 l/h
DN 32
1750 l/h
DN 32
1750 l/h
DN 40
3298 l/h
DN 40
2566 l/h
DN 32
1750 l/h
WD0000126

Type of exchanger	Floor	Simultaneity (PHW)	Simultaneity (UFH)	Volume flow (PWH) [l/h]	Volume flow (UFH) [l/h]	Volume flow total [l/h]	R x l [Pa]	Z [Pa]	Pressure drop [Pa]
Section no. 1 (flats on different storeys)									
Uponor Combi Port M-Pro UFH 19, 19,0l/min, 970 l/h, 52,7 kW, HZ 3,00 kW	1	1,000	0,000	970	0	970	110 x 6,0 = 660	107	767
	2	1,237	0,763	1200	66	1266	46 x 6,0 = 276	60	336
	3	1,426	1,574	1383	136	1519	64 x 6,0 = 384	87	471
	4	1,590	2,410	1542	208	1750	83 x 2,4 = 199	115	341
Primary line	4	1,590	2,410	1542	208	1750	83 x 20,0 = 1660	288	1948
Total									**3836**
Section no. 3 (flats on different storeys)									
Uponor Combi Port M-Pro UFH 19, 19,0l/min, 970 l/h, 52,7 kW, HZ 3,00 kW	1	1,000	0,000	970	0	970	110 x 6,0 = 660	107	767
	2	1,237	0,763	1200	66	1266	46 x 6,0 = 276	60	336
	3	1,426	1,574	1383	136	1519	64 x 6,0 = 384	87	471
	4	1,590	2,410	1542	208	1750	83 x 2,4 = 199	115	341
Total									**1888**
Section no. 3 (flats on different storeys)									
Total and maximum dP for sections	4	-	-	-	-	-	-	-	1888
Primary line	4	1,590	2,410	1542	208	1750	83 x 20,0 = 1660	288	1948
Total									**3836**
Section no. 2 (flats on different storeys)									
Uponor Combi Port M-Pro UFH 19, 19,0l/min, 970 l/h, 52,7 kW, HZ 3,00 kW	1	1,000	0,000	970	0	970	110 x 6,0 = 660	107	767
	2	1,237	0,763	1200	66	1266	46 x 6,0 = 276	60	336
	3	1,426	1,574	1383	136	1519	64 x 6,0 = 384	87	471
	4	1,590	2,410	1542	208	1750	83 x 2,4 = 199	115	341
Total									**1888**
Section no. 2 (flats on different storeys)									
Total and maximum dP for sections	8	-	-	-	-	-	-	-	3836
Primary line	8	2,124	5,876	2060	506	2566	79 x 20,0 = 1580	337	1917
Total									**5753**
Supply from the heating system									
Total and maximum dP for sections	12	-	-	-	-	-	-	-	5753
Primary line	12	2,562	9,438	2485	813	3298	127 x 6,0 = 762	557	1319
Total									**7072**

Pump design for the least favourable flow path

Total pressure drop	[bar]	[Pa]
Pipes: Critical circle	0,07	7072
Pipes with addition (elbow etc.)	0,09	9194

Total pressure drop	[bar]	[Pa]
Pressure drop of the device	0,26	26322
DRG (kvs = 2,9)	0,11	11185

Total pressure drop	[bar]	[Pa]
Total pressure drop of the heat interface unit	0,38	37506
Total	0,47	46700
Ultrasonic dP, assumption: heat meter Qn 1,5	0,05	5000
Total pressure drop with ultrasonic heat meter	0,52	51700

Pump design	
Total flow rate	3298 l/h
Maximum delivery height	0,52 bar

In this example, a homogenous electronically controlled network pump group is used. This network pump is operating with constant pressure regulation. For example, use Uponor Central Port pump SPG 32 UM for this.

Central heating room configuration for decentralised water heating with Uponor heat interface units

Systems with decentralised water heating with Uponor heat interface units must have a buffer tank to secure the supply. The information that follows is the system schema for the example below, with the related components and technical data.

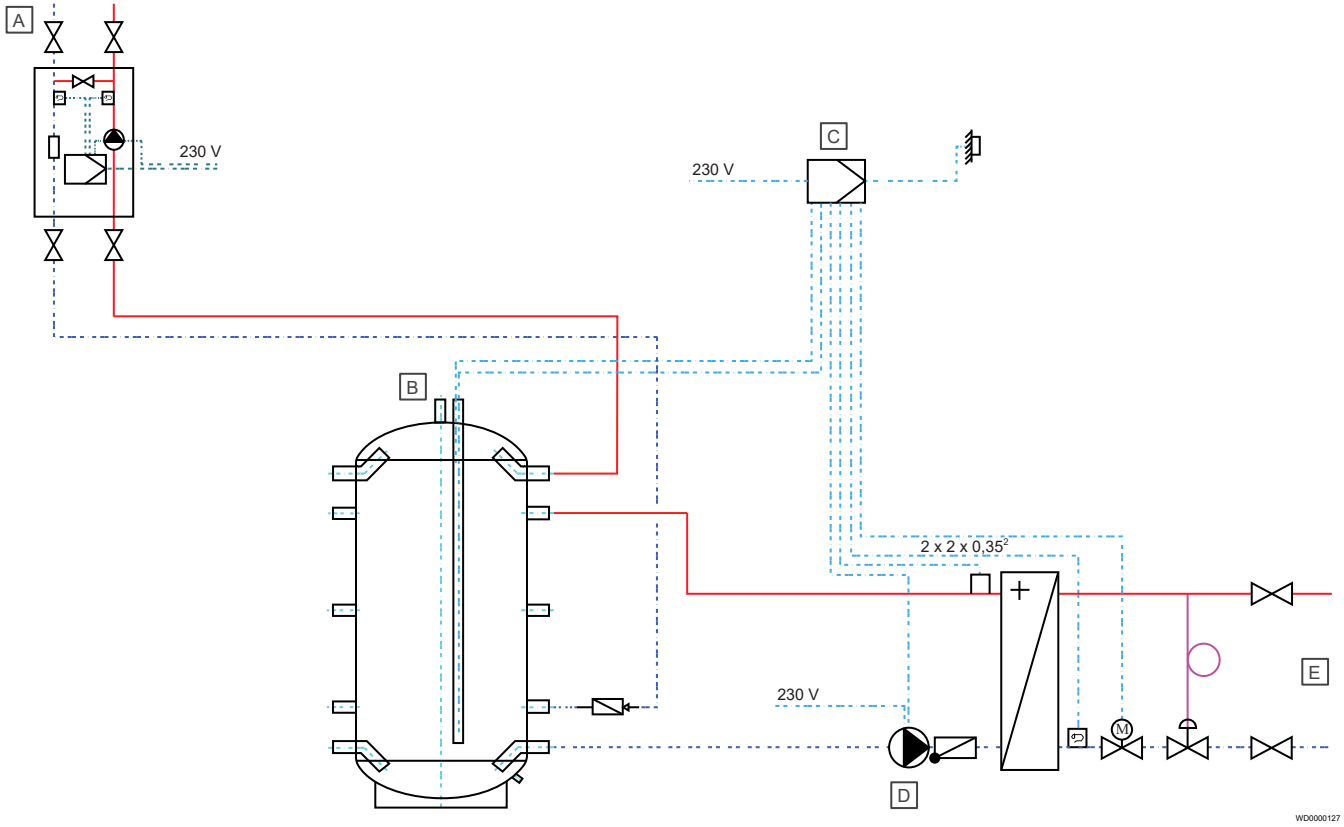

Item	Description
A	Pump group
B	Buffer with air vent and drain valve
C	Controller
D	Buffer charging pump
E	Connection to heat source

Technical data

Item	Value
Heating system	
Heat source	District heating
Heat source output	36,0 kW
Peak-load capacity	1634 kW
Secondary heat source	Districtheating central plant
Solar	
Buffer tank size	750 l
Volume flow to refill the buffer	1029 l/h
Buffer-filling pump	Strotos 25/1-4

Item	Value
Flow temperature for PWH	65 °C
Spread of the heating	30 K
Heating systems	40 K
Total pressure reductions	
Total pressure reductions without a heat meter	0,47 bar
Ultrasonic heat meter	0,05 bar
Total pressure reductions with a heat meter	0,52 bar
Total volume flow	3298 l/h
Heat circuit pump	SPG 32-UM

7 Product overview

7.1 Uponor Combi Port and Aqua Port heat interface units

Uponor heat interface units ensure unrestricted availability of hygienically flawless hot drinking water as well as year-round room heating.

Benefits

- Significant energy savings with the best drinking water hygiene and highest thermal comfort
- A comprehensive product portfolio ensures the ideal integration of a wide range of energy sources
- The sophisticated technology of our units results in a high operational reliability
- Support for your construction project by our technical support team.

Uponor Combi Port M-Pro

Item	Heat interface unit	Description	Tapping capacity [l/min][1)]
	M-Pro UFH for domestic hot water and underfloor heating	• Product-specific accessories available such as in-wall cabinets including pre-assembled pump group and heating circuit manifold • Versions available with a second static heating circuit (e.g., for connecting the Aqua Port Compact under-sink station) • Version available with domestic hot water circulation module • Very slim: depth = 110 mm	15, 19
	M-Pro RC for domestic hot water and radiators	• Product-specific accessories available such as in-wall cabinets including pre-assembled pump group and heating circuit manifold • Version available with domestic hot water circulation module • Very slim: depth = 110 mm	15, 19

[1)] Tapping capacity at primary heating supply 65 °C and water heating 40 K (10 °C cold water to 50 °C hot water).

Uponor Combi Port M-XS

Item	Heat interface unit	Description	Tapping capacity [l/min][1)]
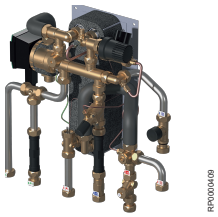	**M-XS** for domestic hot water and underfloor heating	• Version available with domestic hot water circulation module	12, 15, 17

[1)] Tapping capacity at primary heating supply 65 °C and water heating 40 K (10 °C cold water to 50 °C hot water).

Uponor Combi Port M-INS

Item	Heat interface unit	Description	Tapping capacity [l/min][1)]
	M-INS UFH for domestic hot water and underfloor heating	• Version available with domestic hot water circulation module • Completely insulated • Compact unit for easy installation	19
	M-INS RC for domestic hot water and radiator heating	• Version available with domestic hot water circulation module • Completely insulated • Compact unit for easy installation	19

[1)] Tapping capacity at primary heating supply 65 °C and water heating 40 K (10 °C cold water to 50 °C hot water).

Uponor Aqua Port M-INS

Item	Heat interface unit	Description	Tapping capacity [l/min][1)]
	M-INS for domestic hot water	• Completely insulated • Compact unit for easy installation	19

[1)] Tapping capacity at primary heating supply 65 °C and water heating 40 K (10 °C cold water to 50 °C hot water).

Uponor Aqua Port M-XS

Item	Heat interface unit	Description	Tapping capacity [l/min][1)]
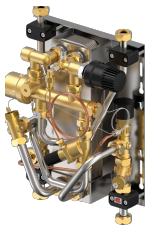	**M-XS** specifically designed for use at more distant dispensing points such as a kitchen or a guest toilet/bathroom	• This HIU offers the highest domestic water hygiene with lower distribution losses compared to domestic water circulation	15, 19

[1)] Tapping capacity at primary heating supply 65 °C and water heating 40 K (10 °C cold water to 50 °C hot water).

7.2 Overview of the components of the heat interface units

Plate heat exchanger (St, CB, SX)

The plate heat exchanger transfers energy between the heating side and the domestic hot water side, thus preparing the hot water.

Depending on the quality of the domestic water, two different quality levels are available:

- Stainless steel plate heat exchangers: free of non-ferrous metals (St) or copper-brazed (CB)
- Stainless steel plate heat exchangers with a silicon dioxide coating (Sealix®) (SX)

For more information, refer to the chapter "Operating Conditions of Plate heat exchangers".

PM controller (PM)

The PM controller is responsible for quickly switching between heating and domestic hot water. By default, it guarantees a proportional ratio of flow rates for heating and domestic hot water. A multi-seal system prevents mixing between the heating and domestic hot water sides.

Cold water throttle disc

The cold water throttle disc is in the connection between the cold water connection of the proportional volume control and the strainer.

The throttle disc limits the amount of cold water to the heat exchanger and prevents the hot water supply from exceeding the calculated volume. The installed cold water throttle disc can be replaced if required.

Draining and filling valve

The filling and draining valves on the heat interface unit are used to fill and flush the system.

Strainer

The strainer collects dirt and its filter can be removed for inspection and cleaning.

Heat meter distance piece with sensor pocket

Note

The heat meter to be installed must have these specifications:

- **Qn = 1,5 m³/h** with fast scanning frequency 1,5 - 2 seconds
- Construction length of **110 mm**
- **¾"** external threaded connection

Note

The heat meter distance piece is not sufficient for continuous operation.

The heat meter distance piece is intended to be replaced with a heat meter to record energy consumption. The used heat meter has to have a fast scanning frequency that fully measures the volume flow rate every 3-4 secs, including kWh calculation.

Stainless steel adapters are available for continuous operation.

Water meter distance piece

The cold water meter distance piece (**110 mm x ¾"**) must be replaced with a water meter to record water consumption.

Zone valve (ZV)

The temperature in the primary heating circuit can be regulated with the zone valve. The housing of this valve has a threaded connection (**30 x 1,5**) for a 2-point actuator.

Thermostatic lead module (BP)

A thermostatic lead module (BP) is used to prevent the risers from cooling down when not dispensing.

1. Set the BP line temperature to approximately **15 K** below the heating supply temperature using the handwheel, with a range 35-60 °C.

Thermostatic hot water temperature limiter (TL)

The domestic hot water temperature is limited through a thermostatically controlled hot water limiter.

Scale	1	2	3	4	5	6	7	8
WW temp. (35-70 °C)	35	40	50	55	60	**65**	65	70

Return temperature limiter (RL)

The return temperature limiter has a setting scale printed on the handwheel. It is pre-set at the factory.

Differential pressure regulators (DI, DH)

The differential pressure regulator protects the control valves, such as the proportional volume control or the radiator valves, from excessive differential pressure and make sures the hydraulic balancing of the installation. The differential pressure regulator works independently and without auxiliary energy and is adjustable.

In-wall and on-wall cabinets including manifolds and ball valves

Cabinet includes pre-installed ball-valve rail and underfloor heating (UFH) manifolds 4-12 loops.

Circulation module with safety valve (ZM)

The circulation module is offered for residential units with a pipe volume of more than 3 liters in the flow path from the combination connection to the tap. A wastewater connection for the safety valve is required.

During planning, it should be checked whether the circulation module can be omitted by choosing a suitable installation location or by using the Uponor Aqua Port M-XS.

Thermostatic regulated mixed circuit (MS)

The thermostatically regulated, mixed injection circuit provides control of the temperature in the secondary heating circuit.

Heating circulation pumps

Note

Read the pump manufacturer's documentation.

The delivered heating circulation pump can either switch between constant or variable curves, or be set to operate with a constant speed.

Settings

Set pump regulation type pushing to the desired symbol. Choose for operation of under floor heating: constant Δp-c.

Room temperature control

Note

Thermostats and remote control modules are not part of the Uponor Combi Port delivery. They must be ordered separately.

Uponor Smatrix

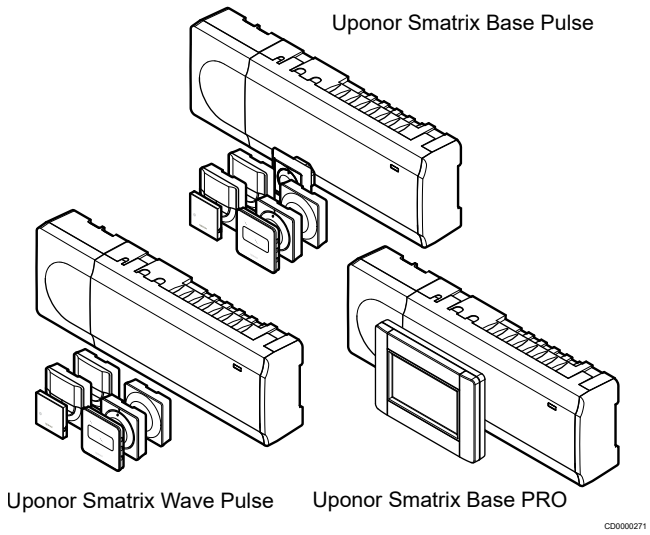

Uponor Smatrix is a fully equipped range of components for room temperature control, optionally via radio or wired. The unique auto-balancing technology eliminates the need for manual balancing of the loops. The smart system accurately determines and controls the exact energy needed for an optimal room temperature. The result is highly comfortable underfloor heating and cooling with reduced energy consumption.

Room control functions

This list shows available functions for the different systems.

Basic functions	Wave Pulse	Base Pulse	Base PRO
Autobalancing	✓	✓	✓
Cooling function	✓	✓	✓
Modularity	✓	✓	✓

Installation and configuration functions	Wave Pulse	Base Pulse	Base PRO
Installation wizard	✓	✓	
Offline configuration	✓	✓	
Over-the-air updates	✓	✓	
Remote support	✓	✓	

Comfort functions	Wave Pulse	Base Pulse	Base PRO
Mobile app	✓	✓	
Smart notifications	✓	✓	
Trend visualization	✓	✓	✓
Multi home control	✓	✓	
Smart home integration	✓	✓	
Comfort settings	✓	✓	✓
ECO profiles	✓	✓	✓
Electrical underfloor heating control	✓	✓	
Ventilation integration	✓	✓	
Fan coil integration	✓		

Technical functions	Wave Pulse	Base Pulse	Base PRO
Uponor cloud services	✓	✓	
Data storage	✓	✓	✓
Pump management	✓	✓	✓
System diagnostics	✓	✓	✓
Heat pump (HP) integration	✓*)	✓*)	✓
Room bypass	✓	✓	✓
Room check			✓
KNX BMS integration			✓
Modbus RTU BMS integration			✓

*) cloud connectivity with selected HP for dynamic heat curve adjustment

Uponor Base flexiboard

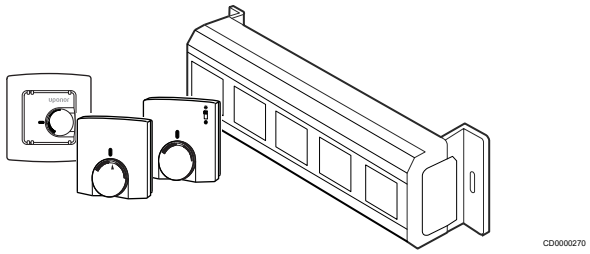

Uponor Base flexiboard is a 230 V control that enables individual room control for 6 or 8 rooms. There are also 2 variants with integrated pump logic available. This switches the circulating pump on or off as required and enables an energy-efficient operation.

Uponor Base X-60 and X-80

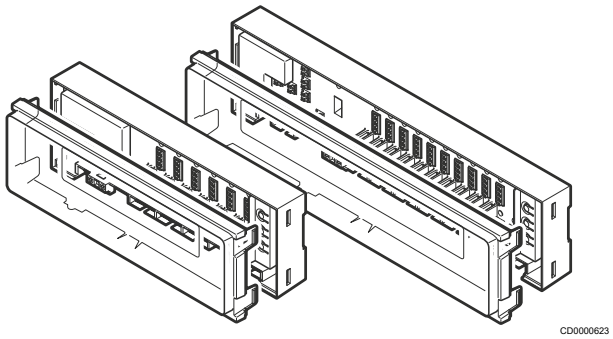

Uponor Base X-60 and X-80 are control units with autobalance function for 230 V standard wiring:

- Base X-60 supports up to 6 thermostats and 12 actuators 230 V.
- Base X-80 supports up to 10 thermostats and 12 actuators 230 V (also for cooling applications).

Available functions

This list shows available functions for the different systems.

Basic functions	X-80	X-60
Autobalancing	✓	✓
Time limit by-pass with autobalance	✓	✓
Heating/cooling switch	✓	
Input: condensation	✓	
Input: day/night switch	✓	✓

Technical functions	X-80	X-60
Pump relay	✓	✓
Boiler relay	✓	
Four wires thermostat connection	✓	✓
Works with three wires thermostat	✓	

8 Consider for installation

8.1 General information

Before you install the heat interface unit (HIU), make sure that:

- the content of the package is complete as per the packaging list.
- you read and observe IOM (Installation and operation manual) for the HIU.
- the primary pipes are installed on the building site.
- the primary pipe installation is flushed and do a leak check.
- the power and ground cables are connected in the installation site.
- that a power supply is available close to the HIU.
- the HIU is installed in a dry and frost-free room with an ambient temperature lower than +40 °C.
- the HIU is protected from running and dripping water.
- the unit is installed in vertical position (not inclined, upside down or lying down).
- the HIU is always easy to access after the assembly.

Mechanical installation

Note

In-wall or on-wall cabinets must be installed before the unit will be installed. Suitable cabinets are available for each heat interface unit type.

Adjust the in-wall cabinet

The in-wall cabinets are adjustable inside the recess in height and depth.

The recess height is calculated as sum of the floor construction height and cabinet body height. Adjust the cabinet feet observing the floor construction height and the values shown on the feet.

Example of cabinet adjustment (see the applicable Uponor Combi Port E-Hybrid instruction):

1. - In-wall cabinet (width x height x depth mm): 810 x 1030 x 150 mm
   - Floor construction height: f = 160 mm
   - Resulting recess dimension:
     width = 810 + 22,5 (left) + 22,5 (right) = 855 mm
     height = 1030 + 25 + f (160) = 1215 mm
     depth = 150 + 5 = 155 mm
     width x height x depth = 855 x 1215 x 155 mm
2. Adjust the height of the cabinet feet to the 160 mm mark (see image below).
3. Put the marks on the wall recess to show where to drill the holes. Use the in-wall cabinet holes as a pattern.
4. Level up horizontally and install the cabinet using screws or expanding foam.

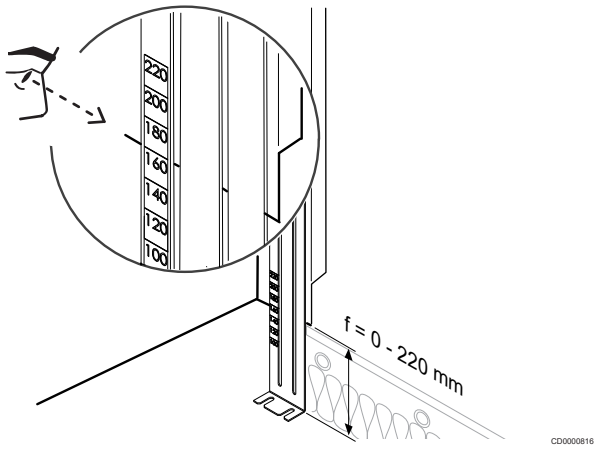

Adjust the on-wall cabinet

The on-wall cabinets are surface-mounted and installed using screws.

Install the heat interface unit

Install the heat interface unit inside the cabinet after assembly:

1. Use the ball valves in the housing for the hydraulic connection.
2. Install the unit on the wall using screws.

For installation instructions, refer to the applicable heat interface units.

Electrical installation

Warning!

Risk of electric shock if touching the components! The unit operates with a 400 V AC (electric heater), 230 V AC (control unit) voltage.

Warning!

Required work must be performed by a qualified installer in accordance with local regulations. This includes electrical connections and installations, set up for operation and maintenance.

8.2 Finishing installation

Finishing installation and visual inspection

Read and obey the instructions to make sure the system operates correctly and safely, do not reduce the specified cable cross-sections. Replace the heat meter distance piece with the heat meter.

If a plastic distance piece is not to be replaced with an optional component, replace it with stainless steel **1.4401** pipe. For more information, speak to the manufacturer.

- Connect the hydraulics correctly.
- Use the supplied gaskets when you connect the pipes.
- Connect the heating supply, heating return and the hot and cold water.
- Install a filling and draining valve on-site at a serviceable central point to fill the central heating system.
- Refer to the planning documentation for installation instructions.
- Examine the tightness of all gaskets on pipe and device connections and tighten them with 30 Nm, if necessary. Always lock the opposite side before you tighten the connections.
- Make sure that all electrical connections are correct, including the polarity of the mains connection. Make sure that the system is correctly grounded.
- Make sure that the installation is filled/flushed and vented.
- Perform all necessary settings on all devices, valves and ball vales which are relevant for correct operation of the heat interface unit.

Tightness testing

Caution!

Pressure leaks can occur at usual operating pressure and must be repaired immediately.

The tightness test for heating and domestic water installations must obey country-specific regulations.

9 Uponor Combi Port M-Pro

9.1 Operating principle (2pipe system)

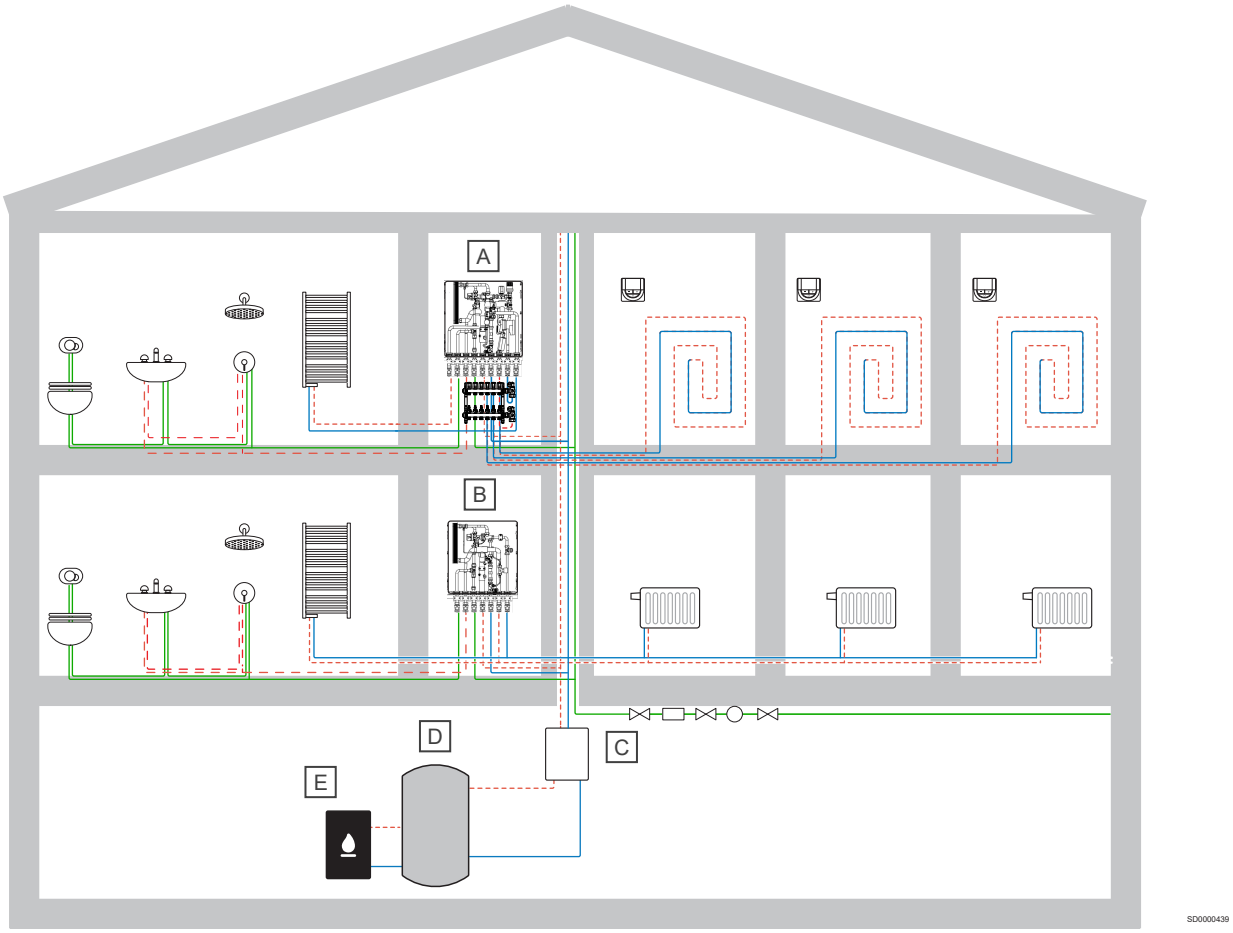

Item	Description
A	Uponor Combi Port M-Pro UFH for domestic hot water preparation and underfloor heating
B	Uponor Combi Port M-Pro RC for domestic hot water preparation and radiator heating

Item	Description
C	System pump group
D	Buffer storage
E	Heat source

9.2 Functional description

In the Uponor Combi Port M-Pro heat interface unit, the cold water is heated only when required in the flow-through principle via a stainless steel high performance plate heat exchanger. This always ensures a low return temperatures of the heating water. The energy is supplied by heating water with a flow temperature of at least 55 °C via the heating water flow.

Domestic hot water: The domestic hot water is generated only on demand. A mechanical proportional quantity control valve is controlling the process. When more hot water is required, the valve opens further to increase the flow of the heating water through the heat exchanger. This ensures a constant hot water temperature. If no hot water is needed, the valve stops the supply of heating water through the heat exchanger. It can cool down which is beneficial for the hygiene.

Domestic heating: A hydraulic balancing of the domestic heating circuit for hot water preparation within the heat interface unit can be carried out with the control valves. The room temperature control is carried out in the underfloor heating system in connection with for example Uponor Smatrix or Uponor Base flexiboard.

The Uponor Combi Port M-Pro is available in two different versions, in-wall and on-wall installation, for most common situations. When delivered to the construction site the cabinet is ready for installation following the customer's speficications.

Additional functions: These are integrated, using additional modules such as the circulation module.

9.3 Types and components

Note

The illustrations that follow show example set-ups for all units. Individual components can vary in appearance.

The Uponor Combi Port M-Pro units are divided into two groups, for radiator connections (RC) and for underfloor heating (UFH).

Uponor Combi Port M-Pro UFH

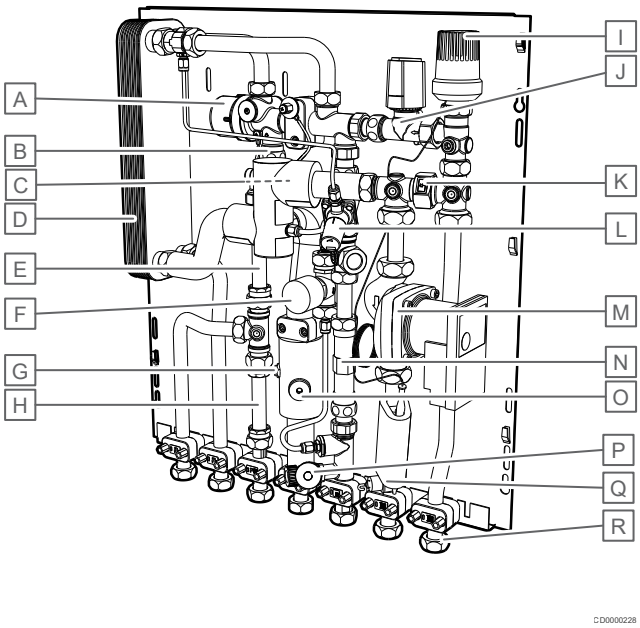

Item	Description
A	Proportional volume control (PM)
B	Cold water throttle disc
C	Strainer
D	Plate heat exchanger
E	Hot water meter distance piece
F	Thermostatic lead module (BP)
G	Sensor pocket heat meter
H	Cold water meter distance piece
I	Thermostatic regulation
J	Zone valve for limiting heating flow to the flat
K	Backflow preventer in the screw connection
L	Differential pressure regulator (DI)
M	Pump
N	Heat meter distance piece
O	Strainer
P	Draining and filling valve
Q	Safety temperature limiter
R	Connection, ball valve

Uponor Combi Port M-Pro UFH-Additional heating

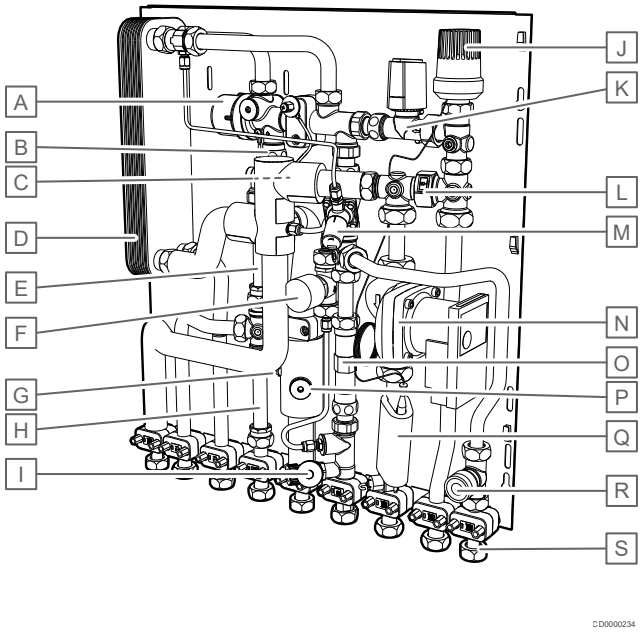

Item	Description
A	Proportional volume control (PM)
B	Cold water throttle disc
C	Strainer
D	Plate heat exchanger
E	Hot water meter distance piece
F	Thermostatic lead module (BP)
G	Sensor pocket heat meter
H	Cold water meter distance piece
I	Draining and filling valve
J	Thermostatic regulation
K	Zone valve for limiting heating flow to the flat
L	Backflow preventer in the screw connection
M	Differential pressure regulator (DI)
N	Pump
O	Heat meter distance piece
P	Strainer
Q	Safety temperature limiter
R	Zone valve for limiting heating flow to the flat
S	Connection, ball valve

Uponor Combi Port M-Pro UFH-TL

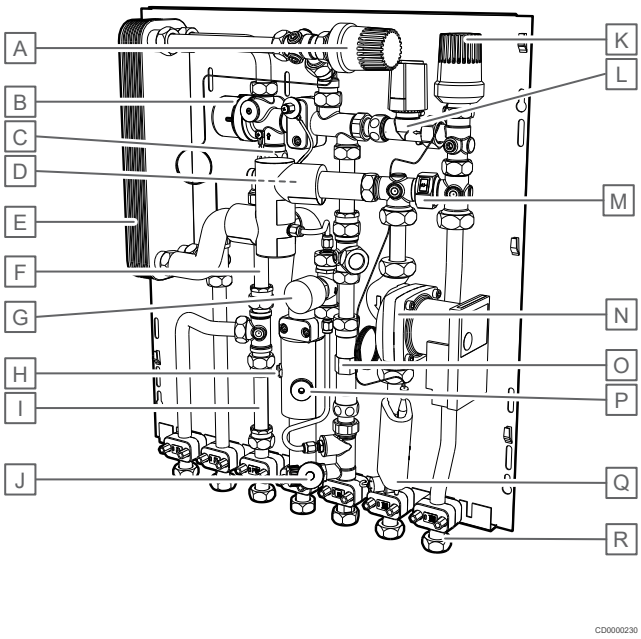

Item	Description
A	Thermostatic hot water temperature limiter (TL)
B	Proportional volume control (PM)
C	Cold water throttle disc
D	Strainer
E	Plate heat exchanger
F	Hot water meter distance piece
G	Thermostatic lead module (BP)
H	Sensor pocket heat meter
I	Cold water meter distance piece
J	Draining and filling valve
K	Thermostatic regulation
L	Zone valve for limiting heating flow to the flat
M	Backflow preventer in the screw connection
N	Pump
O	Heat meter distance piece
P	Strainer
Q	Safety temperature limiter
R	Connection, ball valve

Uponor Combi Port M-Pro UFH-TL-Additional heating

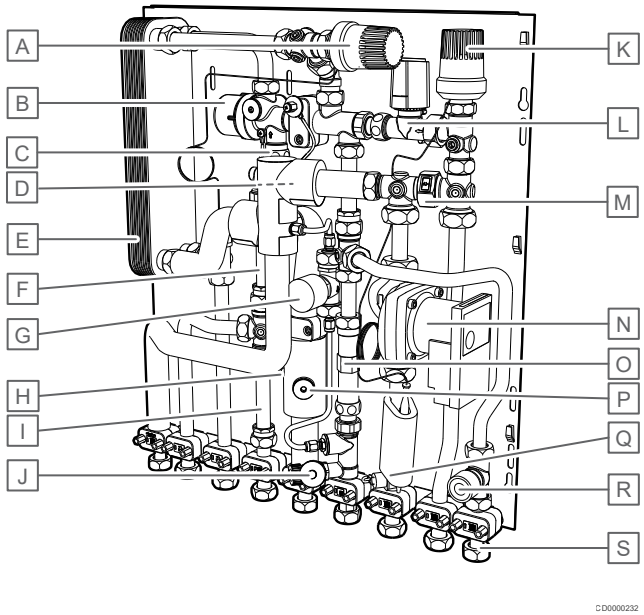

Item	Description
A	Thermostatic hot water temperature limiter (TL)
B	Proportional volume control (PM)
C	Cold water throttle disc
D	Strainer
E	Plate heat exchanger
F	Hot water meter distance piece
G	Thermostatic lead module (BP)
H	Sensor pocket heat meter
I	Cold water meter distance piece
J	Draining and filling valve
K	Thermostatic regulation
L	Zone valve for limiting heating flow to the flat
M	Backflow preventer in the screw connection
N	Pump
O	Heat meter distance piece
P	Strainer
Q	Safety temperature limiter
R	Zone valve for limiting heating flow to the flat
S	Connection, ball valve

Uponor Combi Port M-Pro RC

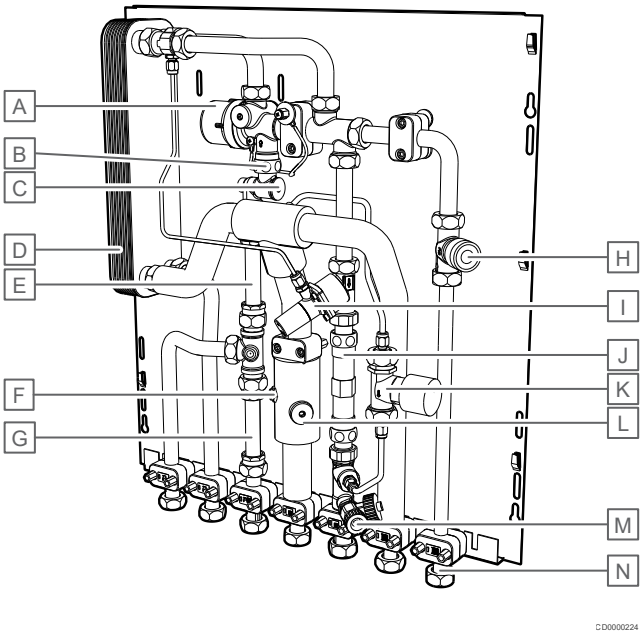

Item	Description
A	Proportional volume control (PM)
B	Cold water throttle disc
C	Strainer
D	Plate heat exchanger
E	Hot water meter distance piece
F	Sensor pocket heat meter
G	Cold water meter distance piece
H	Zone valve for limiting heating flow to the flat
I	Differential pressure regulator (DI)
J	Heat meter distance piece
K	Thermostatic lead module (BP)
L	Strainer
M	Draining and filling valve
N	Connection, ball valve

Uponor Combi Port M-Pro RC-TL

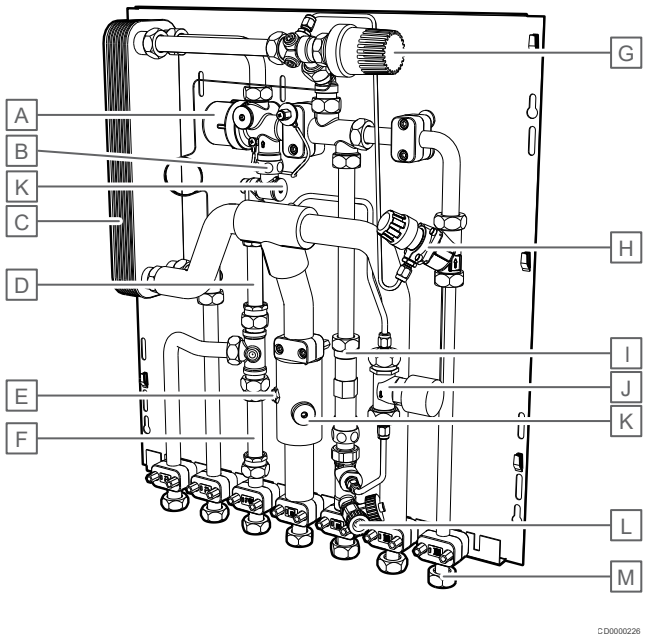

Item	Description
A	Proportional volume control (PM)
B	Cold water throttle disc
C	Plate heat exchanger
D	Hot water meter distance piece
E	Sensor pocket heat meter
F	Cold water meter distance piece
G	Thermostatic hot water temperature limiter (TL)
H	Differential pressure regulator (DH)
I	Heat meter distance piece
J	Thermostatic lead module (BP)
K	Strainer
L	Draining and filling valve
M	Connection, ball valve

Uponor Combi Port M-Pro RC-RL

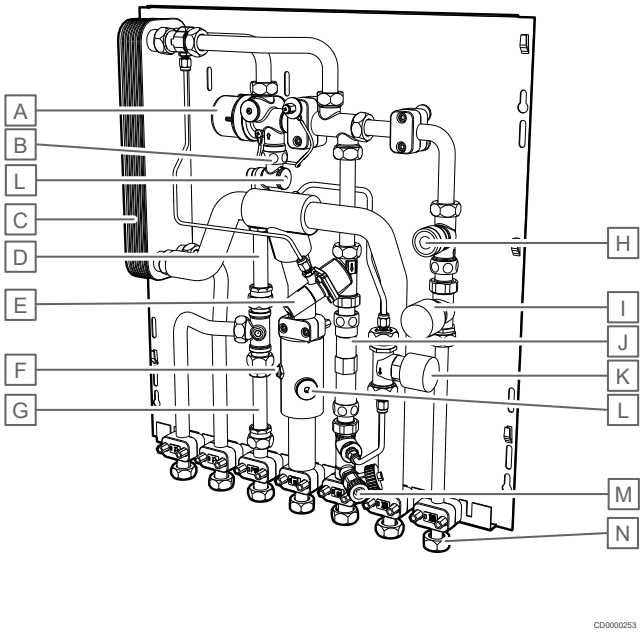

Item	Description
A	Proportional volume control (PM)
B	Cold water throttle disc
C	Plate heat exchanger
D	Hot water meter distance piece
E	Differential pressure regulator (DI)
F	Sensor pocket heat meter
G	Cold water meter distance piece
H	Zone valve for limiting heating flow to the flat
I	Return temperature limiter (RL)
J	Heat meter distance piece
K	Thermostatic lead module (BP)
L	Strainer
M	Draining and filling valve
N	Connection, ball valve

Uponor Combi Port M-Pro RC-TL-RL

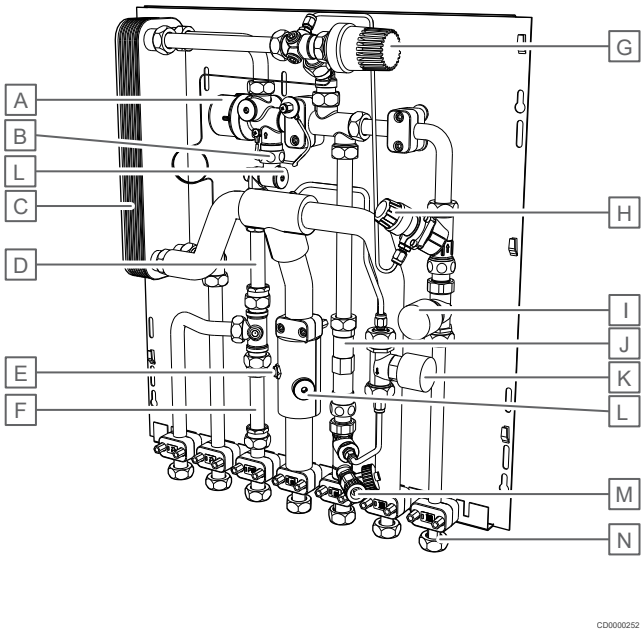

Item	Description
A	Proportional volume control (PM)
B	Cold water throttle disc
C	Plate heat exchanger
D	Hot water meter distance piece
E	Sensor pocket heat meter
F	Cold water meter distance piece
G	Thermostatic hot water temperature limiter (TL)
H	Differential pressure regulator (DH)
I	Return temperature limiter (RL)
J	Heat meter distance piece
K	Thermostatic lead module (BP)
L	Strainer
M	Draining and filling valve
N	Connection, ball valve

Uponor Combi Port M-Pro RC with circulation

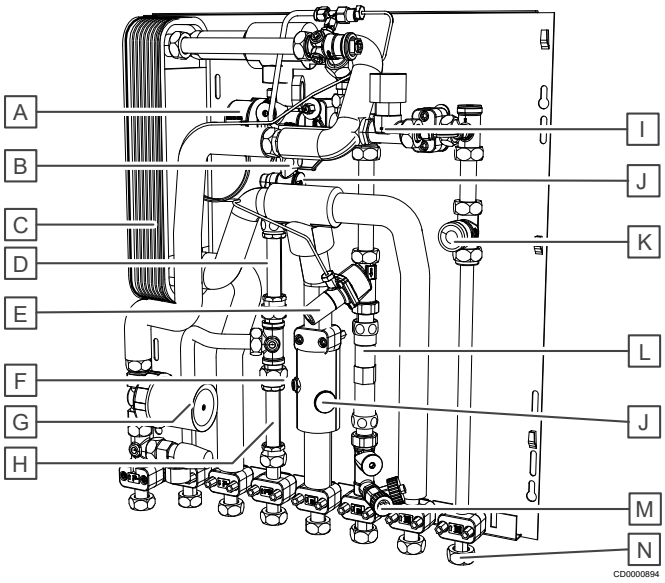

Item	Description
A	Proportional volume control (PM)
B	Cold water throttle disc
C	Plate heat exchanger
D	Hot water meter distance piece
E	Differential pressure regulator
F	Sensor pocket heat meter
G	Circulation module with safety valve (ZM)
H	Cold water meter distance piece
I	Thermostatic lead module (BP)
J	Strainer
K	Zone valve for limiting heating flow to the flat
L	Heat meter distance piece
M	Draining and filling valve
N	Connection, ball valve

9.4 Accessories

Uponor offers a variety of accessories for use with the standard portfolio.

The following accessories are optional. Their use completes the product portfolio. The application is described in more detail in the following chapters.

In-wall and on-wall cabinets with manifolds

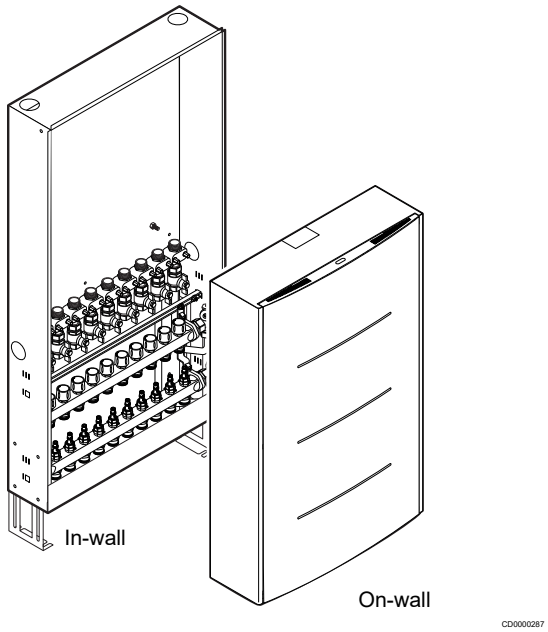

Manifolds for underfloor heating (UFH) and ball-valve rails are preinstalled in the cabinets. The manifolds are customised with 4, 6, 8 or 10 loops.

In-wall cabinet (width x height x depth, mm)	On-wall cabinet (width x height x depth, mm)
750 x 1190 x 110, without UFH manifold	755 x 1180 x 260, with UFH manifold 4, 6, 8 or 10 loops
750 x 1190 x 110, with UFH manifold 4, 6, 8 or 10 loops	600 x 800 x 165, without UFH manifold
610 x 840 x 110, without UFH manifold	

Connection description

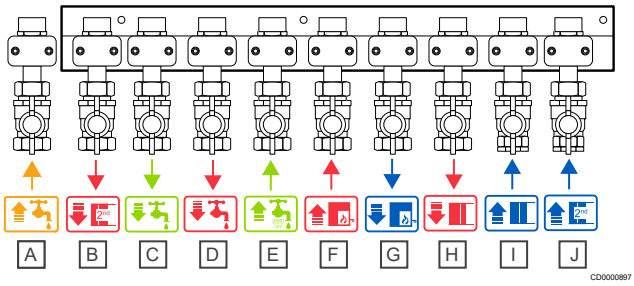

Item	Description
A	Circulation
B	Heating circuit supply (secondary, 2nd)
C	Cold water to apartment (PWC)
D	Domestic hot water to apartment (PWH)
E	Cold water from riser (PWC)
F	Heating supply (primary)
G	Heating return (primary)
H	Heating supply (secondary)
I	Heating return (secondary)
J	Heating circuit return (secondary, 2nd)

9.5 Hydraulic schemes

Uponor Combi Port M-Pro UFH

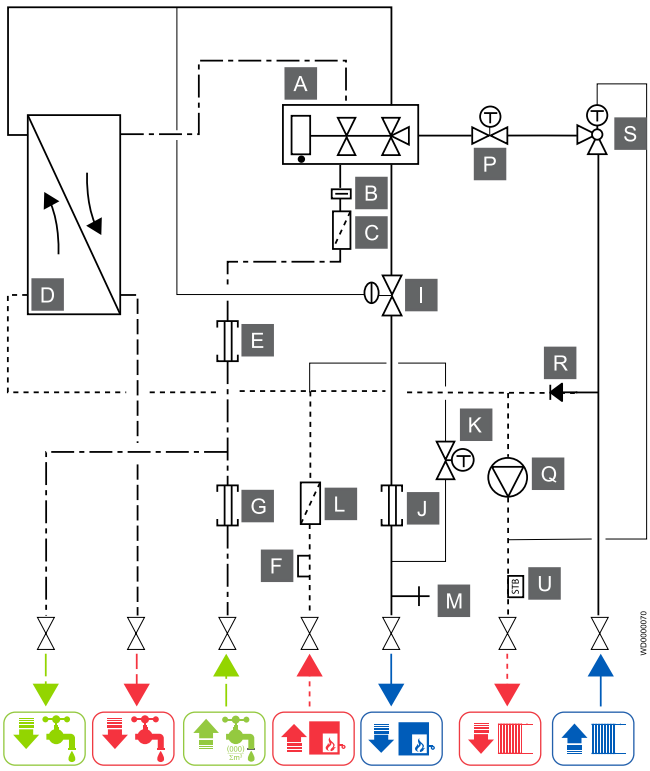

Item	Description
A	Proportional volume control (PM)
B	Cold water throttle disc
C	Strainer
D	Plate heat exchanger
E	Hot water meter distance piece
F	Sensor pocket heat meter
G	Cold water meter distance piece
I	Differential pressure regulator (DI)
J	Heat meter distance piece
K	Thermostatic lead module (BP)
L	Strainer
M	Draining and filling valve
P	Zone valve for limiting heating flow to apartment
Q	Pump
R	Backflow preventer
S	Thermostatic regulation
U	Safety temperature limiter

Uponor Combi Port M-Pro UFH - additional heating

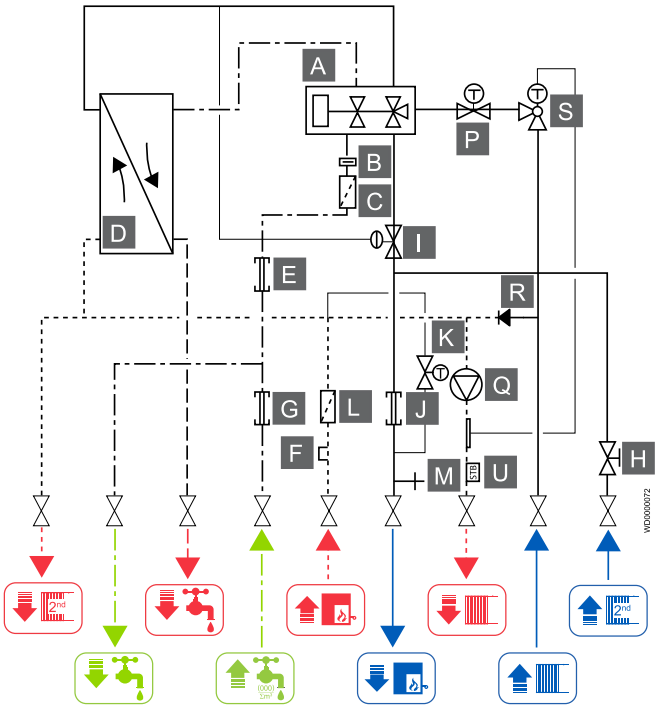

Item	Description
A	Proportional volume control (PM)
B	Cold water throttle disc
C	Strainer
D	Plate heat exchanger
E	Hot water meter distance piece
F	Sensor pocket heat meter
G	Cold water meter distance piece
H	Zone valve for limiting heating flow to the flat
I	Differential pressure regulator (DI)
J	Heat meter distance piece
K	Thermostatic lead module (BP)
L	Strainer
M	Draining and filling valve
P	Zone valve for limiting heating flow to apartment
Q	Pump
R	Backflow preventer
S	Thermostatic regulation
U	Safety temperature limiter

Uponor Combi Port M-Pro UFH-TL

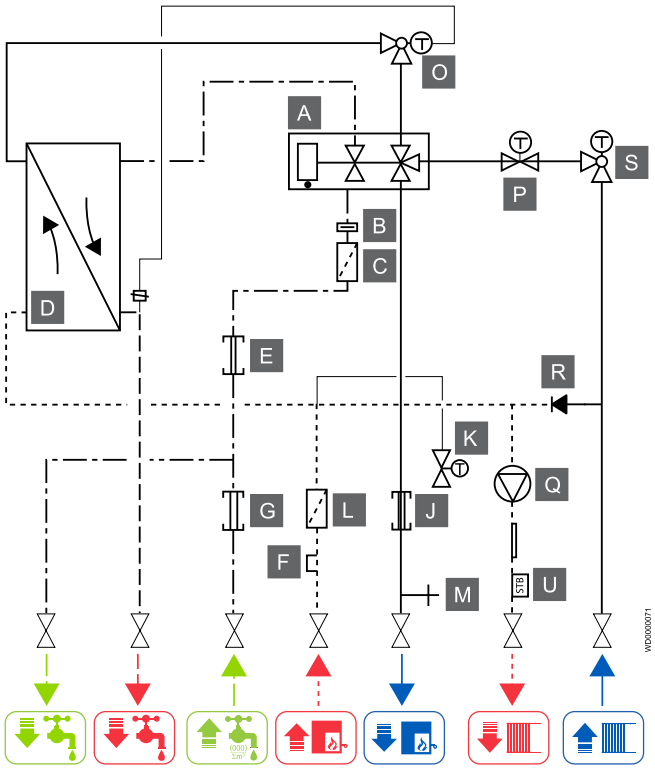

Item	Description
A	Proportional volume control (PM)
B	Cold water throttle disc
C	Strainer
D	Plate heat exchanger
E	Hot water meter distance piece
F	Sensor pocket heat meter
G	Cold water meter distance piece
J	Heat meter distance piece
K	Thermostatic lead module (BP)
L	Strainer
M	Draining and filling valve
O	Thermostatic hot water temperature limiter (TL)
P	Zone valve for limiting heating flow to apartment
Q	Pump
R	Backflow preventer
S	Thermostatic regulation
U	Safety temperature limiter

Uponor Combi Port M-Pro UFH-TL - additional heating

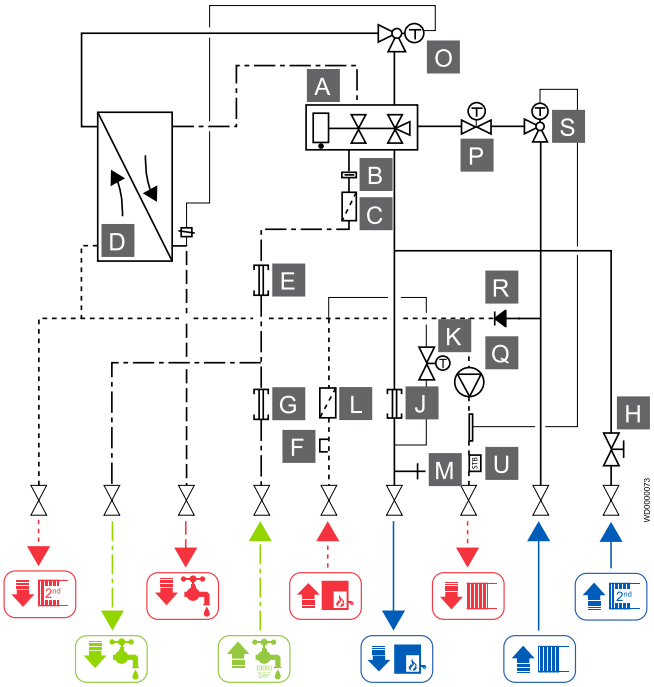

Item	Description
A	Proportional volume control (PM)
B	Cold water throttle disc
C	Strainer
D	Plate heat exchanger
E	Hot water meter distance piece
F	Sensor pocket heat meter
G	Cold water meter distance piece
H	Zone valve for limiting heating flow to the flat
J	Heat meter distance piece
K	Thermostatic lead module (BP)
L	Strainer
M	Draining and filling valve
O	Thermostatic hot water temperature limiter (TL)
P	Zone valve for limiting heating flow to apartment
Q	Pump
R	Backflow preventer
S	Thermostatic regulation
U	Safety temperature limiter

Uponor Combi Port M-Pro RC

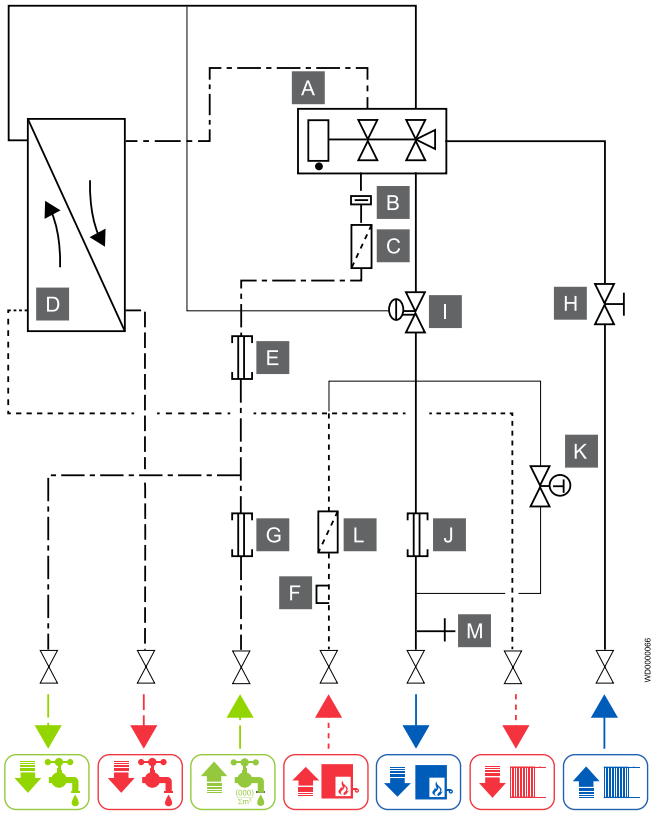

Item	Description
A	Proportional volume control (PM)
B	Cold water throttle disc
C	Strainer
D	Plate heat exchanger
E	Hot water meter distance piece
F	Sensor pocket heat meter
G	Cold water meter distance piece
H	Zone valve for limiting heating flow to the flat
I	Differential pressure regulator (DI)
J	Heat meter distance piece
K	Thermostatic lead module (BP)
L	Strainer
M	Draining and filling valve

Uponor Combi Port M-Pro RC TL

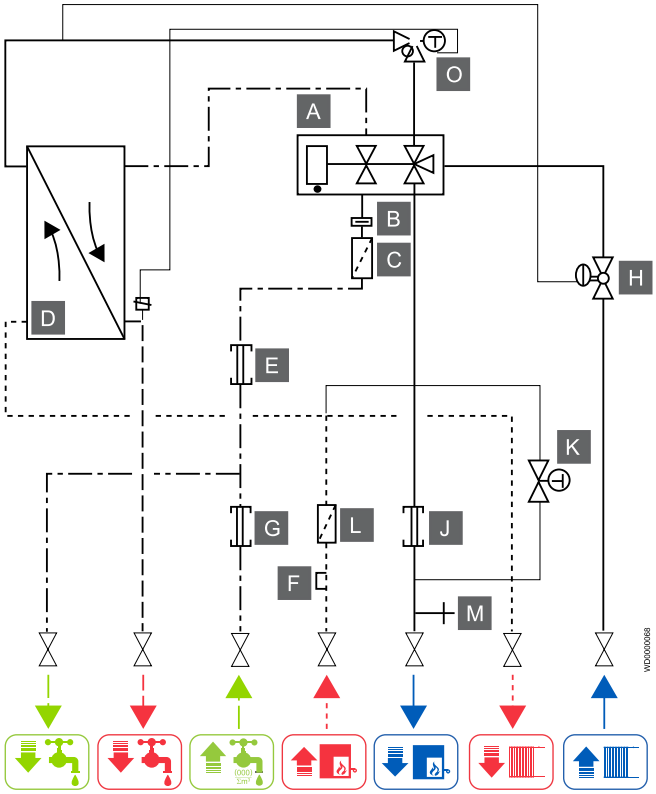

Item	Description
A	Proportional volume control (PM)
B	Cold water throttle disc
C	Strainer
D	Plate heat exchanger
E	Hot water meter distance piece
F	Sensor pocket heat meter
G	Cold water meter distance piece
H	Differential pressure regulator (DH)
J	Heat meter distance piece
K	Thermostatic lead module (BP)
L	Strainer
M	Draining and filling valve
O	Thermostatic hot water temperature limiter (TL)

Uponor Combi Port M-Pro RC RL

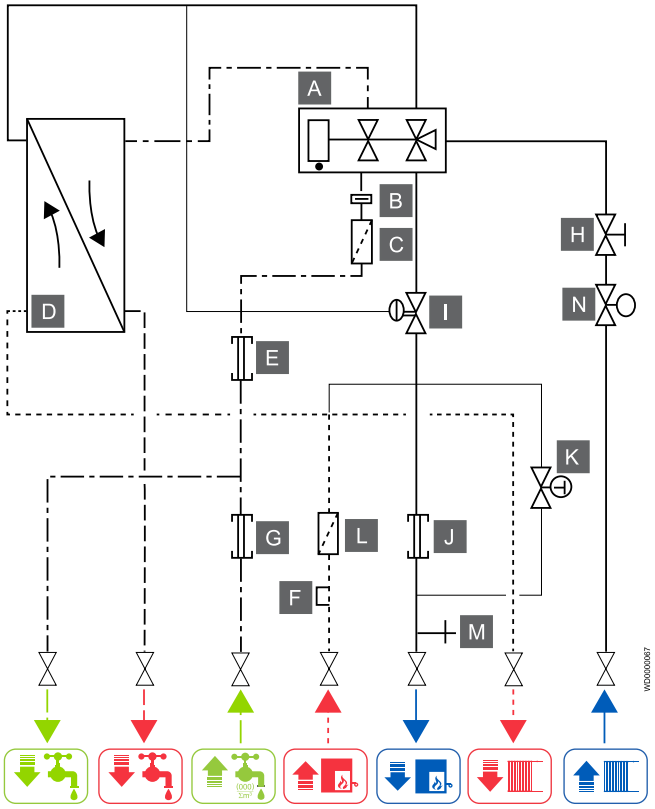

Item	Description
A	Proportional volume control (PM)
B	Cold water throttle disc
C	Strainer
D	Plate heat exchanger
E	Hot water meter distance piece
F	Sensor pocket heat meter
G	Cold water meter distance piece
H	Zone valve for limiting heating flow to the flat
I	Differential pressure regulator (DI)
J	Heat meter distance piece
K	Thermostatic lead module (BP)
L	Strainer
M	Draining and filling valve
N	Return temperature limiter (RL)

Uponor Combi Port M-Pro RC TL-RL

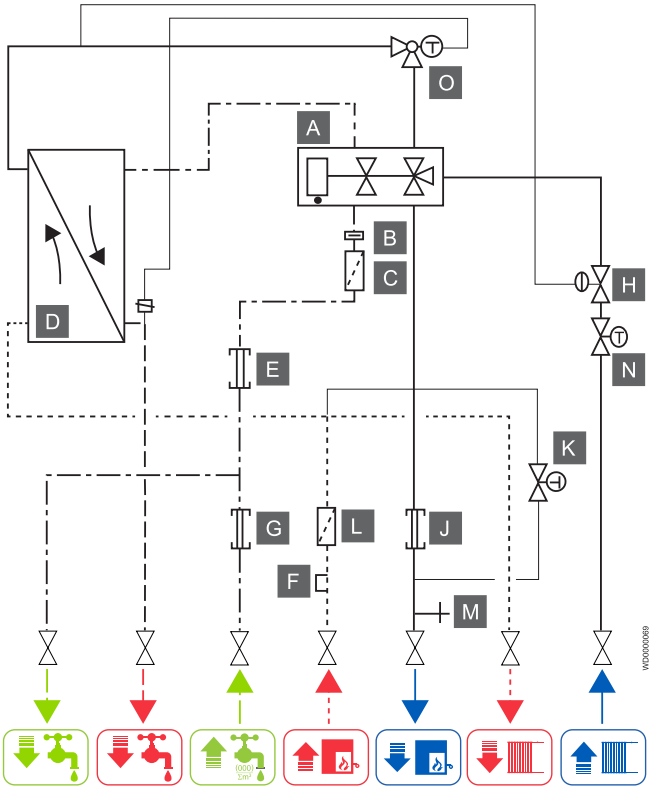

Item	Description
A	Proportional volume control (PM)
B	Cold water throttle disc
C	Strainer
D	Plate heat exchanger
E	Hot water meter distance piece
F	Sensor pocket heat meter
G	Cold water meter distance piece
H	Differential pressure regulator (DH)
J	Heat meter distance piece
K	Thermostatic lead module (BP)
L	Strainer
M	Draining and filling valve
N	Return temperature limiter (RL)
O	Thermostatic hot water temperature limiter (TL)

Uponor Combi Port M-Pro RC with circulation

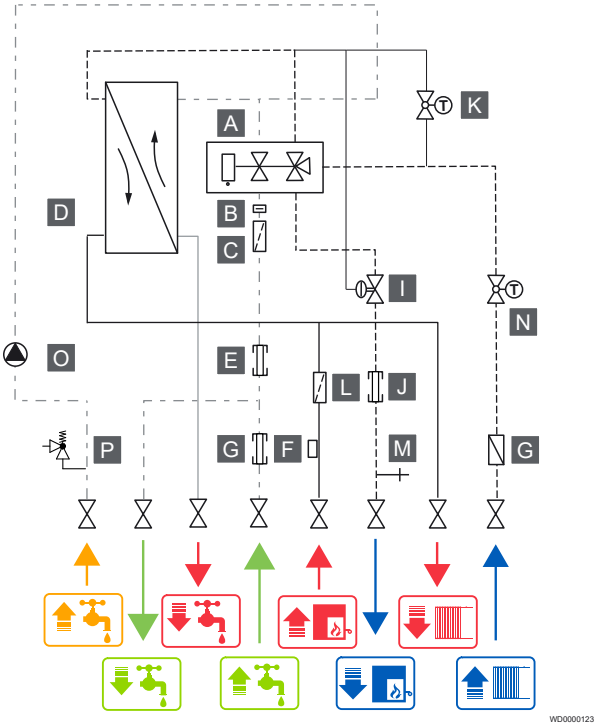

Item	Description
A	Proportional volume control (PM)
B	Cold water throttle disc
C	Strainer
D	Plate heat exchanger
E	Hot water meter distance piece
F	Sensor pocket heat meter
G	Cold water meter distance piece
I	Differential pressure regulator (DI)
J	Heat meter distance piece
K	Thermostatic lead module (BP)
L	Strainer
M	Draining and filling valve
N	Thermostatic hot water temperature limiter (TL)
O	Circulation module with safety valve (ZM)
P	Safety valve

9.6 Technical data

HIU	Value
Medium	Heating water: Refer to VDI 2035. Consider local regulations.
Operating temperature	5–85 °C

Domestic hot water	Value
Tapping capacity at primary heating supply 65 °C and water warming of 40 K (10 °C to 50 °C)	HIU with 24 plate heat exchanger: 15 l/min HIU with 40 plate heat exchanger: 19 l/min
Max. operating pressure	PN 10
Min. pressure (must comply with standards of the domestic water supplier)	2,0 bar

Primary heating	Value
Max. operating pressure	PN 10
Differential pressure	0,6 bar

Space heating (Uponor Vario manifold)	Value
Medium	Heating water: Refer to VDI 2035. Consider local regulations.
Operating temperature	5–60 °C
Max. operating pressure	6 bar

Material	Value
Fittings and valves, sanitary	CW617N, certification: DVGW, UBA
Fittings, heating	CW617N, CW614N

Material	Value
Flat gaskets	Certification: VDI 2200, DVGW, FDA, GL, EG1935/2004, Technical guidelines for air pollution control, VP 401, W270, WRAS, Guideline for hygienic assessment of elastomers in contact with drinking water („KTW“)
Plate heat exchanger	1.4404 stainless steel (depending on HIU): • free of non-ferrous metal soldered (St) • copper-brazed (CB)
Pipes	1.4401 stainless steel

Electrical connection	Value
Power supply	230 V, 50 Hz, when used with mixing circuit / zone valve with room thermostat Otherwise, functional without electrical connection

Dimension/Weight	Value
Dimension	See dimensional drawings
Weight	HIU with 24 plate heat exchanger: 16 kg HIU with 40 plate heat exchanger: 17 kg

Pipe connections	Value
via ball valves	G¾, IG flat gasket

Optimal water quality	Value
See chapter "Water quality for heat interface units"	

9.7 Dimensional drawings

Note

The illustrations below show example setups. The individual modules can have different appearances.

All dimensions are given in mm.

Uponor Combi Port M-Pro UFH (all types)

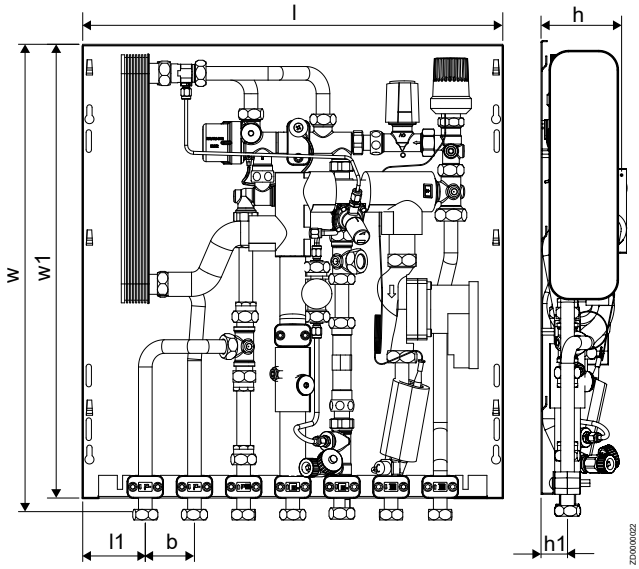

l	l1	w	w1	h	h1	b
556	83	618	600	107	35	65

Uponor Combi Port M-Pro RC (all types)

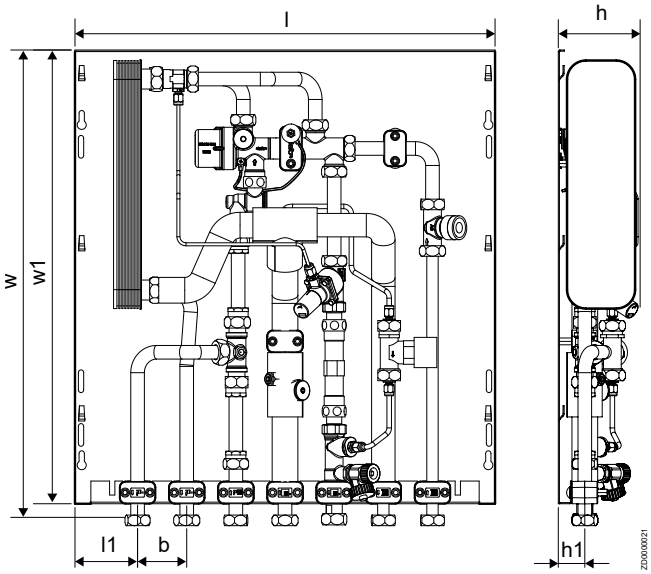

l	l1	w	w1	h	h1	b
556	83	618	600	108	35	65

Uponor Combi Port M-Pro RC with circulation

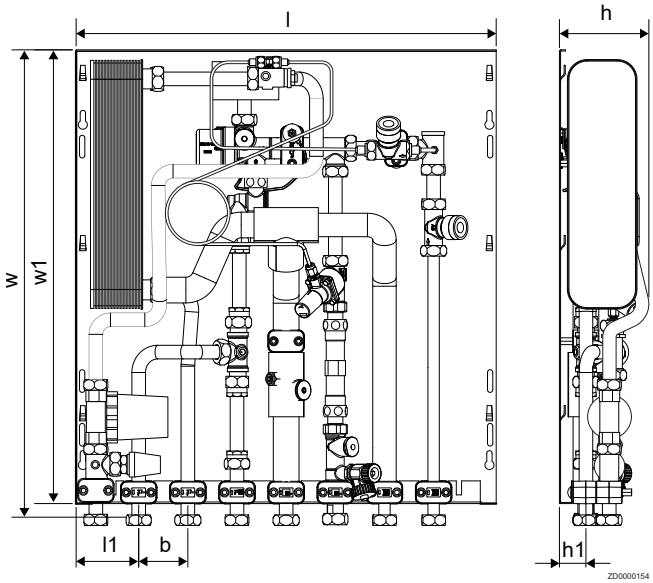

l	l1	w	w1	h	h1	b
556	83	618	600	200	35	65

In-wall cabinet 610 x 840

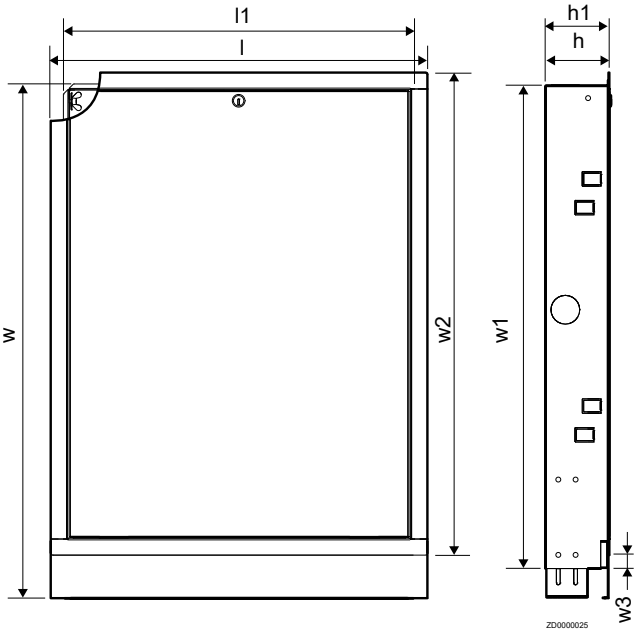

l	l_1	w	w_1	h	h_1	b	b_1
655	610	1090	840	110	135	839	23

In-wall cabinet 750 x 1190

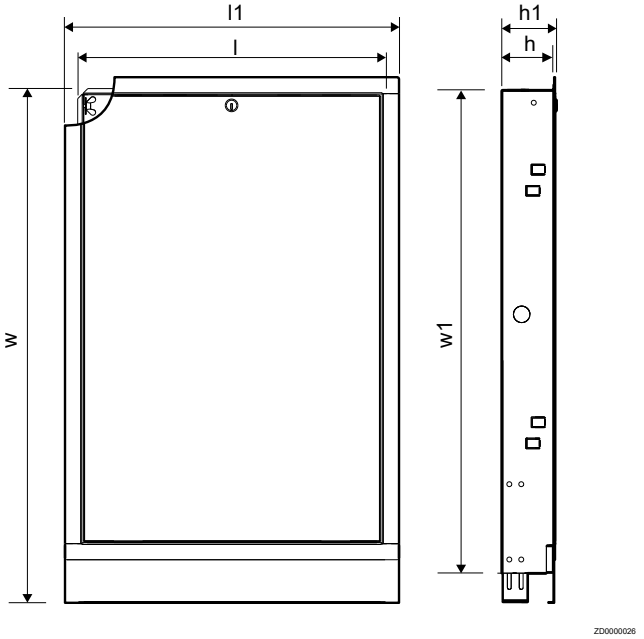

l	l_1	w	w_1	h	h_1	b	b_1
795	750	1240	1190	110	135	1190	22

In-wall cabinet 750 x 1190 with UFH manifold

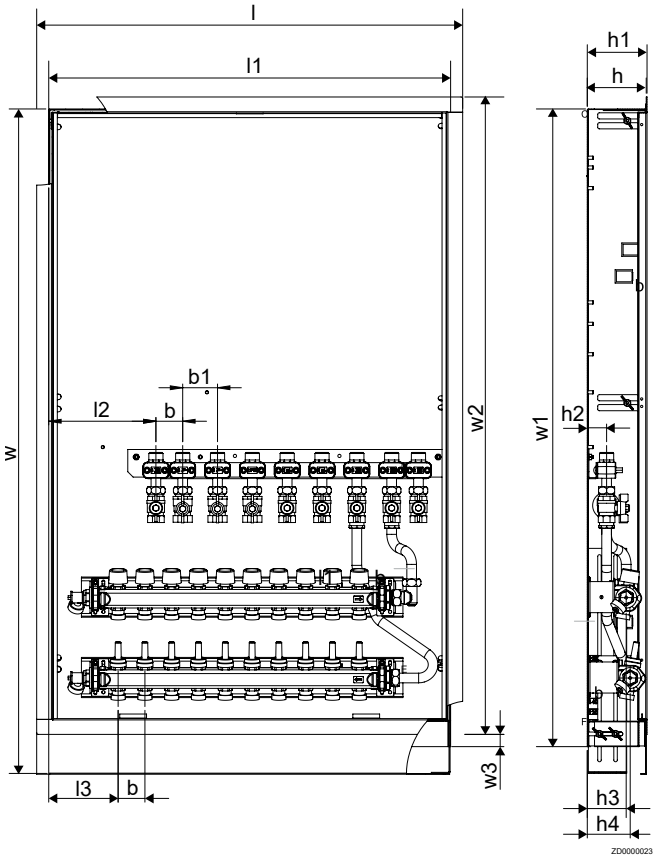

l	l_1	l_2	l_3	w	w_1	w_2	w_3
795	750	200	129	1240	1190	1190	23

h	h_1	h_2	h_3	h_4	b	b_1	
110	135	36	73	80	50	65	

On-wall cabinet 600 x 800

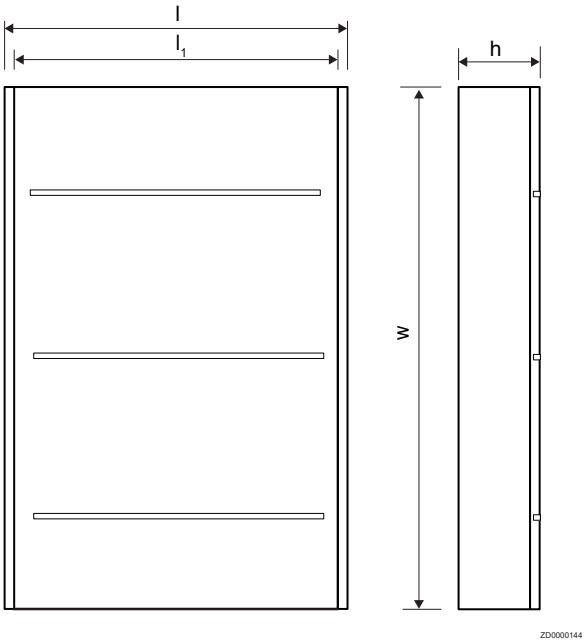

l	w	h
600	800	165

Ball valve rail (9 valves)

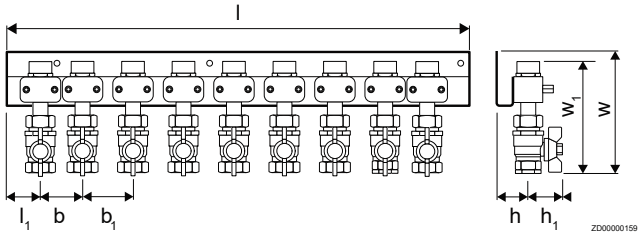

l	l_1	w	w_1	h	h_1	b	b_1
550	40	144	131	40	83	50	65

On-wall cabinet 755 x 1180 with UFH manifold

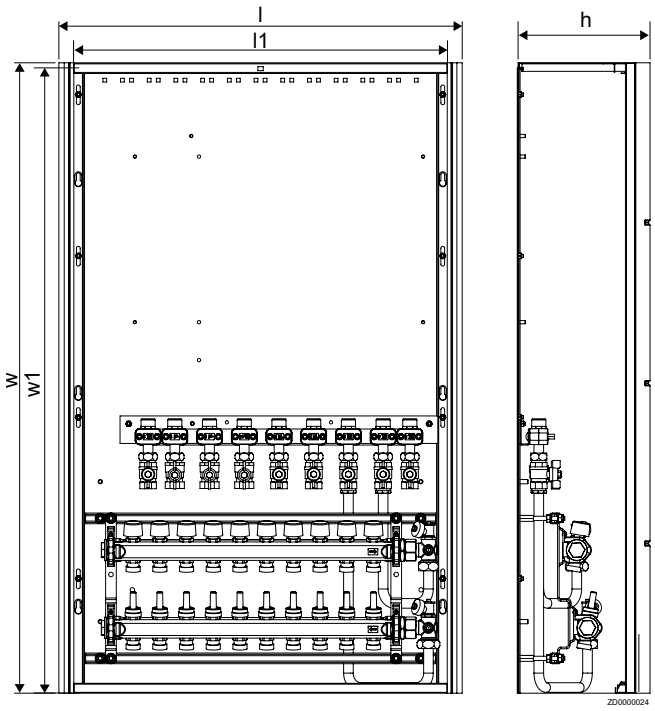

l	l_1	w	w_1	h
755	700	1180	1170	260

9.8 Performance diagrams

Pressure drop with heat exchanger 24 plates

Heating side (primary)

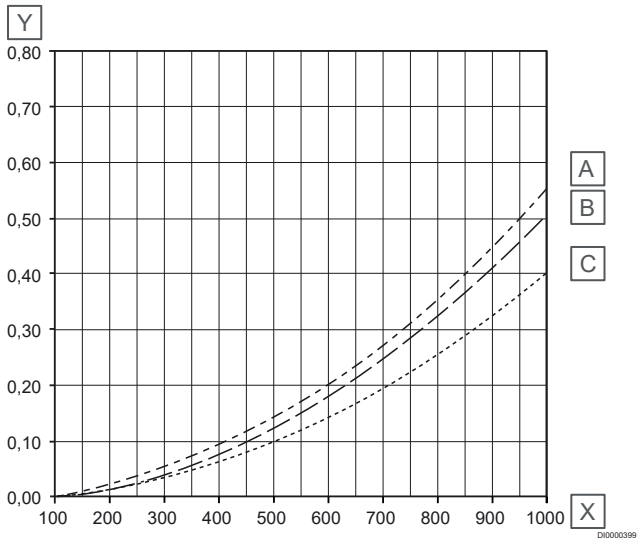

Item	Description
A	dP station including TL
B	dP station including differential pressure control
C	dP station
X	Primary heating demand [l/h], max. 1000 l/h
Y	Pressure drop [bar]

Pressure drops including ball valve. Additional pressure drops, e.g. heatmeter with **Qn 1,5** of approximately **0,05 bar** and other internal/external fixtures must be included.

Domestic hot water side (secondary)

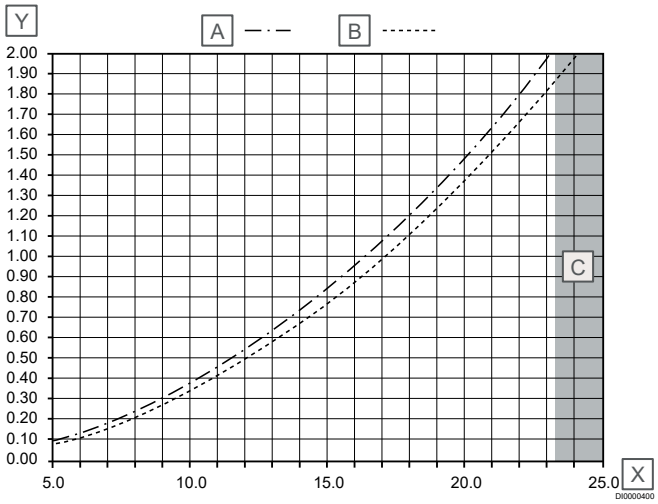

Item	Description
A	dP station without throttle disc, including TL
B	dP station without throttle disc
C	Max range
X	Tapping capacity [l/min]
Y	Pressure drop [bar]

Pressure drops at the throttle disc must be included in the calculation.

- 10 l/min = 0,65–0,85 bar
- 12 l/min = 0,68–0,88 bar
- 15 l/min = 0,70–0,90 bar
- 17 l/min = 0,75–0,95 bar
- 19 l/min = 1,00–1,20 bar

Primary heating demand and return temperatures with heat exchanger 24 plates

Cold water warming 35 K (10-45 °C)

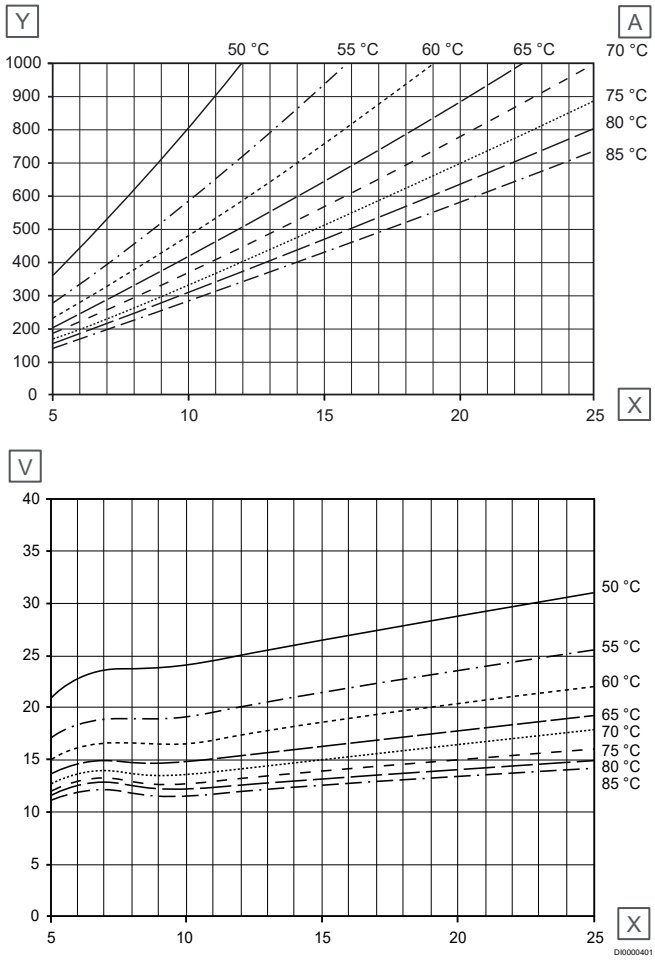

Item	Description
X	Tapping capacity [l/min]
Y	Primary heating demand [l/h], max. 1000 l/h
V	Return temperature [°C]
A	Primary heating supply temperatures

Cold water warming 40 K (10-50 °C)

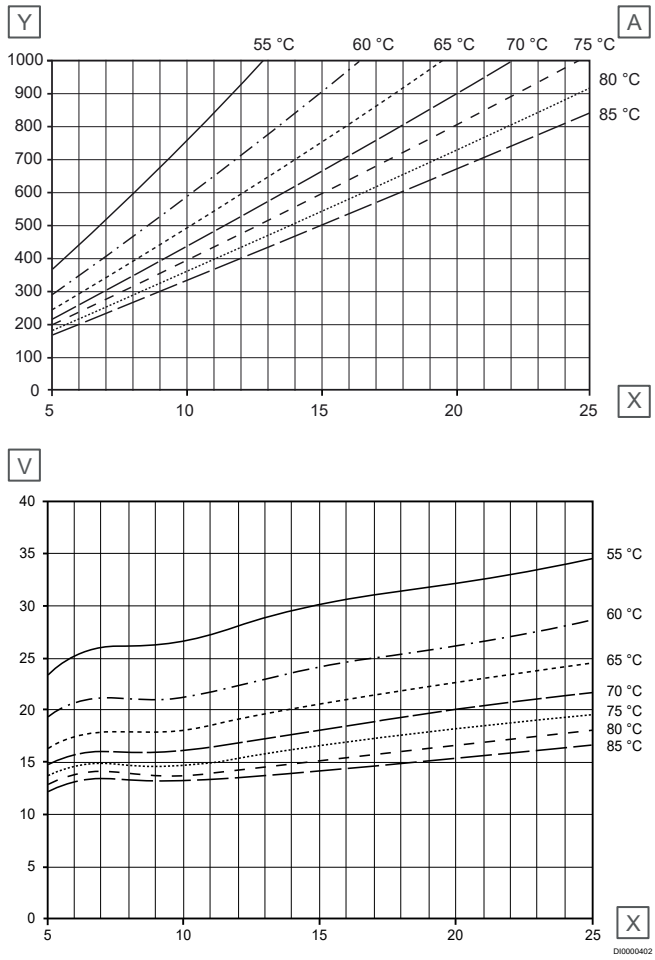

Item	Description
X	Tapping capacity [l/min]
Y	Primary heating demand [l/h], max. 1000 l/h
V	Return temperature [°C]
A	Primary heating supply temperatures

Pressure drop with heat exchanger 40 plates

Heating side (primary)

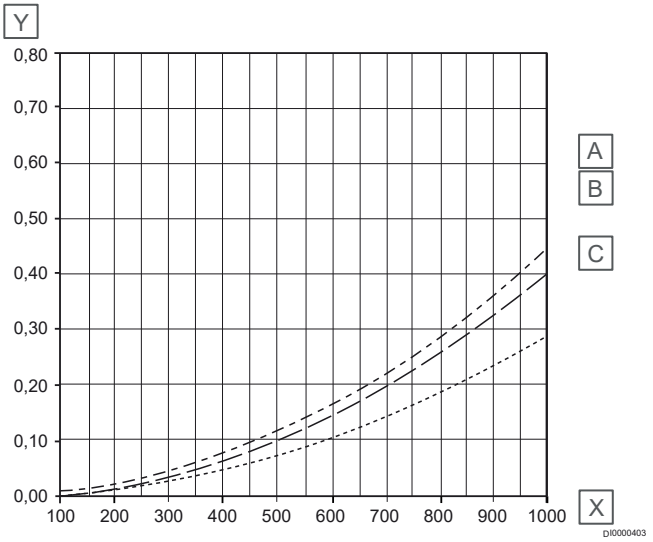

Item	Description
A	dP station including TL
B	dP station including differential pressure control
C	dP station
X	Primary heating demand [l/h], max. 1000 l/h
Y	Pressure drop [bar]

Pressure drops including ball valve. Additional pressure drops, e.g. heat meter with **Qn 1,5** of approximately **0,05 bar** and other internal/ external fixtures must be included.

Domestic hot water side (secondary)

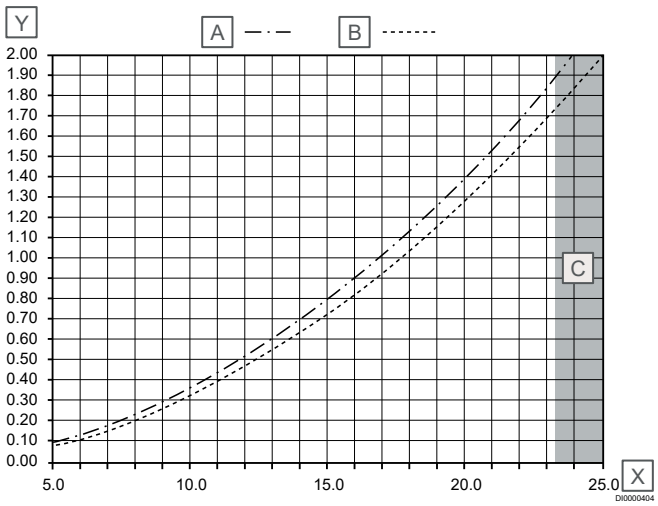

Item	Description
A	dP station without throttle disc, including TL
B	dP station without throttle disc
C	Max range
X	Tapping capacity [l/min]
Y	Pressure drop [bar]

Pressure drops at the throttle disc must be included in the calculation.

- 10 l/min = 0,65–0,85 bar
- 12 l/min = 0,68–0,88 bar
- 15 l/min = 0,70–0,90 bar
- 17 l/min = 0,75–0,95 bar
- 19 l/min = 1,00–1,20 bar

Primary heating demand and return temperatures with heat exchanger 40 plates

Cold water warming 35 K (10-45 °C)

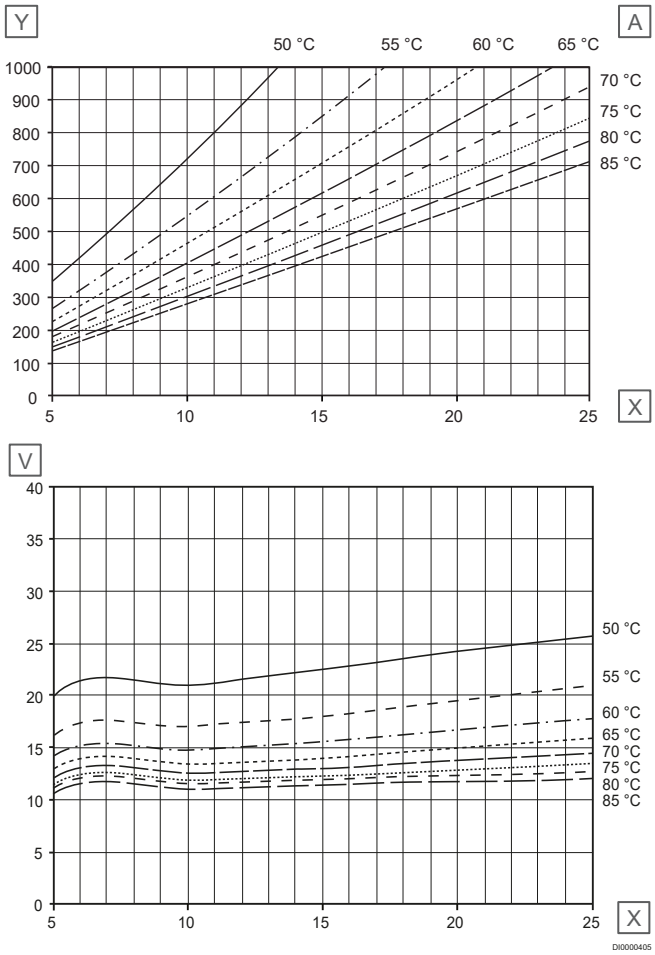

Item	Description
X	Tapping capacity [l/min]
Y	Primary heating demand [l/h], max. 1000 l/h
V	Return temperature [°C]
A	Primary heating supply temperatures

Cold water warming 40 K (10-50 °C)

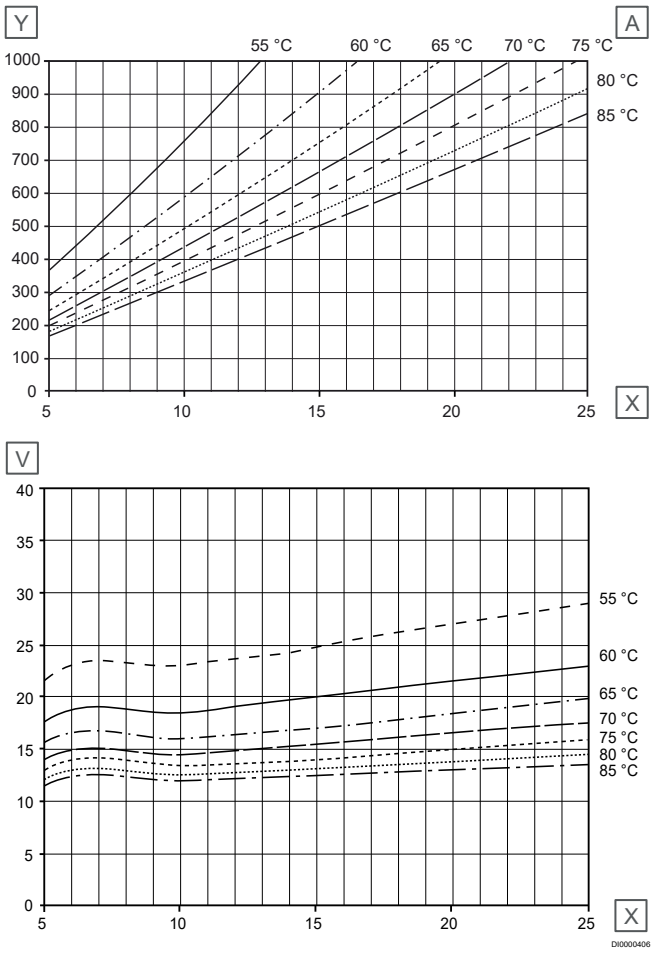

Item	Description
X	Tapping capacity [l/min]
Y	Primary heating demand [l/h], max. 1000 l/h
V	Return temperature [°C]
A	Primary heating supply temperatures

10 Uponor Combi Port M-XS

10.1 Operating principle (2pipe system)

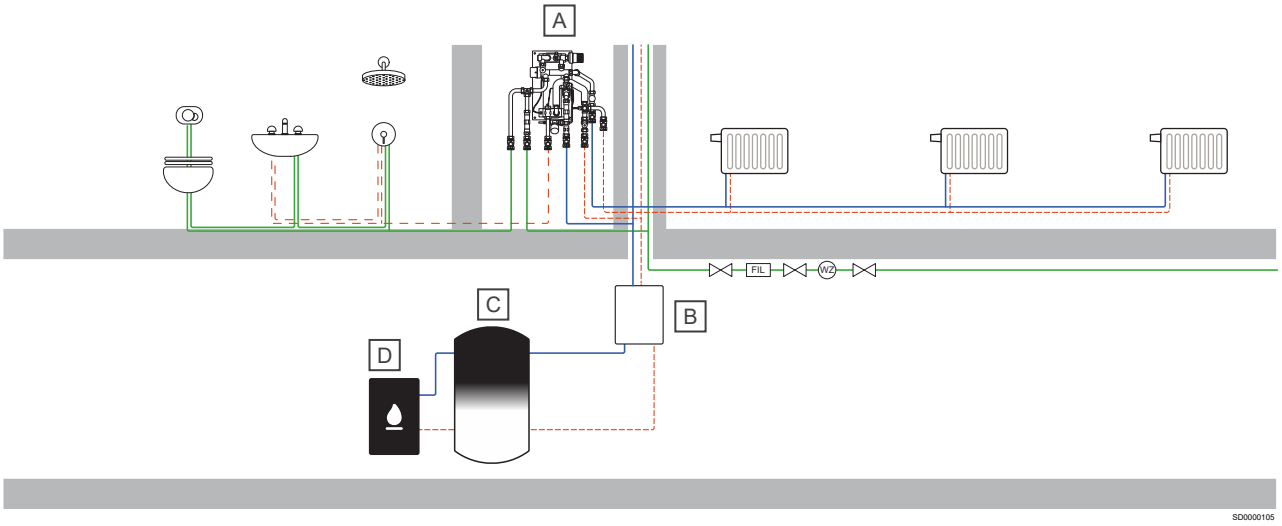

Item	Description
A	Uponor Combi Port M-XS for domestic hot water preparation and underfloor heating
B	System pump group

Item	Description
C	Buffer storage tank
D	Heat source

10.2 Functional description

Combi Port M-XS is a prefabricated heat interface unit (HIU) suited for use in single family houses. The ready-to-install unit supplies domestic hot water, controls the domestic heating and measures the heating energy as well as cold water consumption.

In the Combi Port M-XS unit, the cold water is heated only when required following the flow-through principle with a stainless steel high performance plate heat exchanger. This always ensures a low return temperature on the heating water. The energy is supplied by heating water with a flow temperature of at least 55 °C via the heating water flow.

Domestic hot water: The domestic hot water is generated only on demand. A mechanical proportional quantity control valve is controlling the process. When more hot water is required, the valve opens further to increase the flow of the heating water through the heat exchanger. This ensures a constant hot water temperature. If no hot water is needed, the valve stops the supply of heating water through the heat exchanger. It can cool down which is beneficial for the hygiene.

Domestic heating: The Combi Port M-XS manages independently the hydraulic balancing between hot water and heating. The room temperature control is carried out in the heating system.

Circulation module: When using the circulation module, a safety valve must be provided on-site.

10.3 Types and components

Note

The illustrations below show example setups. The individual modules can have different appearances.

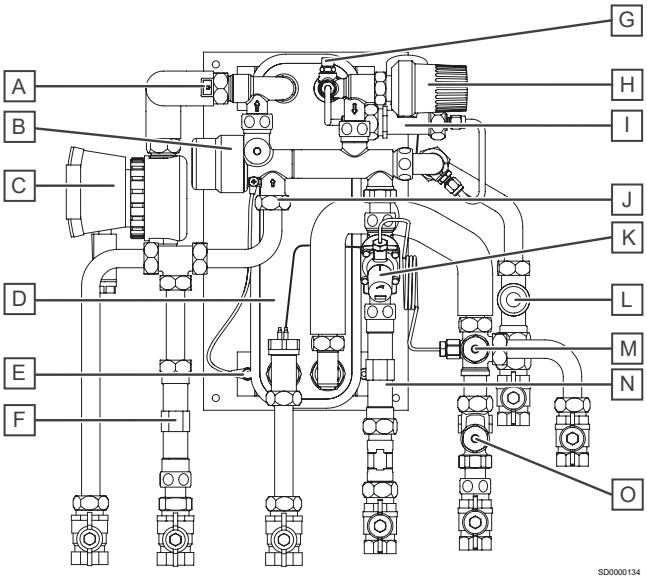

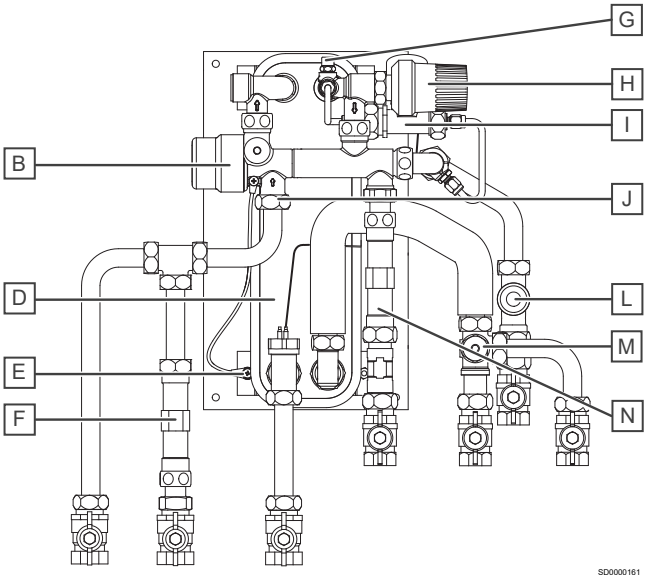

Item	Description
A	Backflow preventer
B	Proportional volume control (PM)
C	Circulation pump module (ZM)
D	Plate heat exchanger
E	Earthing on site
F	Cold water meter distance piece
G	Air vent valve
H	Thermostatic hot water temperature limiter (TL)
I	Thermostatic lead module (BP)
J	Cold water throttle disc
K	Differential pressure regulator (DI)
L	Zone valve for limiting heating flow to the flat (ZV)
M	Sensor pocket heat meter
N	Heat meter distance piece
O	Strainer

Pre-installed ball valves in the cabinets

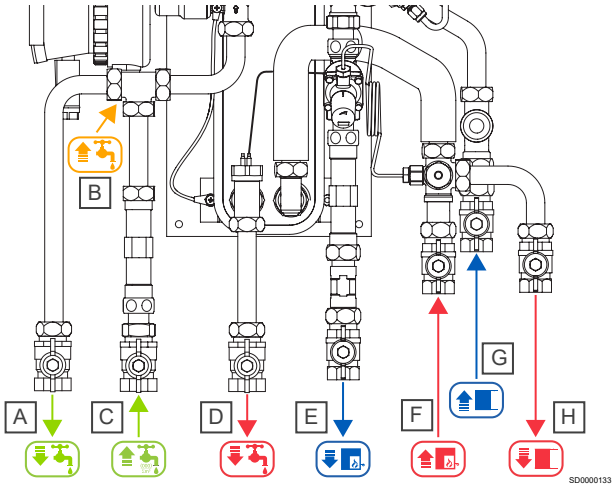

Item	Description
A	Cold water to apartment (PWC)
B	Warm tap water with circulation
C	Cold water from riser (PWC)
D	Domestic hot water to apartment (PWH)
E	Heating return (primary)
F	Heating supply (primary)
G	Heating return (secondary)
H	Heating supply (secondary)

10.4 Hydraulic schemes

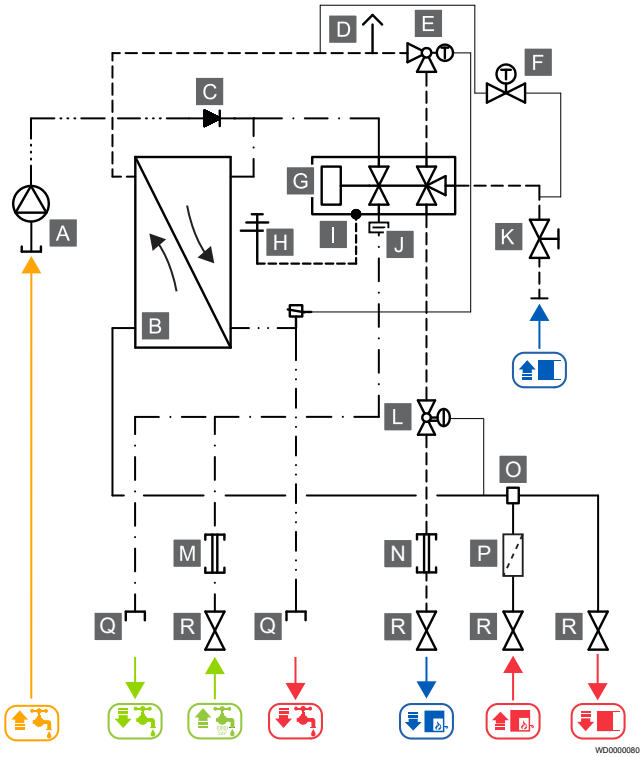

Item	Description
A	Circulation pump module (ZM)
B	Heat exchanger
C	Backflow preventer
D	Air vent valve
E	Thermostatic hot water temperature limiter (TL)
F	Thermostatic lead module (BP)
G	Proportional volume control (PM)
H	Earthing on site
I	Equipotential bonding connection
J	Cold water throttle disc
K	Zone valve for limiting heating flow to the flat
L	Differential pressure regulator (DI)
M	Cold water meter distance piece
N	Heat meter distance piece
O	Sensor pocket heat meter
P	Strainer
Q	Swivel nut
R	Ball valve

10.5 Technical data

HIU	Value
Medium	Heating water in accordance with local regulations and standards, for example VDI 2035
Operating temperature	5–85 °C

Domestic hot water	Value
Tapping capacity (at primary heating supply 65 °C and water heating 40 K, 10 °C cold water to 50 °C hot water)	Heat exchanger 16 plates: 12 l/min Heat exchanger 24 plates: 15 l/min Heat exchanger 40 plates: 17 l/min
Max. operating pressure	PN 10
Min. pressure (must comply with the domestic water supplier standards)	2,0 bar

Primary heating	Value
Max. operating pressure	PN 10
Differential pressure	0,6 bar

Space heating (Uponor Vario manifold)	Value
Medium	Heating water: Refer to VDI 2035. Consider local regulations.
Operating temperature	5–60 °C
Operating pressure	6 bar

Material	Value
Fittings and valves, sanitary	CW617N, certification: DVGW, UBA
Fittings, heating	CW617N, CW614N
Flat gaskets	certification: VDI 2200, DVGW, FDA, GL, EG 1935/2004, TA Luft, VP 401,W270, WRAS, in accordance with guidelines, domestic water, elastomer (KTW)
Plate heat exchanger	1.4404 stainless steel, depending on HIU • copper-brazed (CB)
Pipes	1.4401 Stainless steel

Electric connection - electric heater	Value
Power supply	Use with a mixing circuit or a zone valve with a room thermostat. Otherwise, it operates without an electrical connection.

Dimensions/Weight	Value
Dimensions	refer to dimensional drawings
Weight	10–14 kg

Pipe connections	Value
through ball valves	G 3/4, IG flat sealing

Optimal water quality	Value
See chapter "Water quality for heat interface units"	

10.6 Dimensional drawings

Note

The illustrations below show example setups. The individual modules can have different appearances.

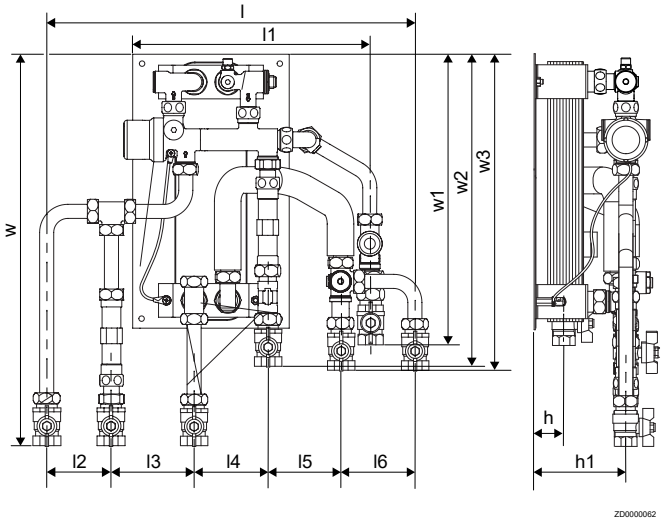

l	l1	l2	l3	l4	l5	l6
~471 mm	303 mm	83 mm	106 mm	94 mm	93 mm	95 mm

w	w1	w2	w3	h	h1
501 mm	361 mm	401 mm	406 mm	35 mm	116 mm

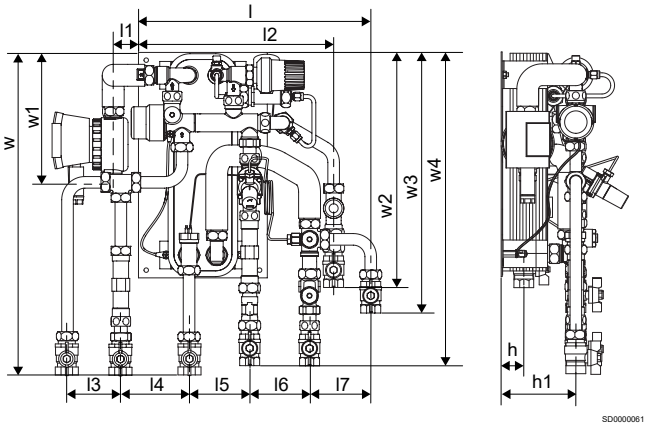

l	l1	l2	l3	l4	l5
~495 mm	39 mm	303 mm	83 mm	106 mm	94 mm

l6	l7	w	w1	w2	w3
93 mm	95 mm	501 mm	201,5 mm	361 mm	405 mm

w4	h	h1			
490 mm	35 mm	116 mm			

10.7 Performance diagrams

Pressure drop with heat exchanger 16 plates

Heating side (primary)

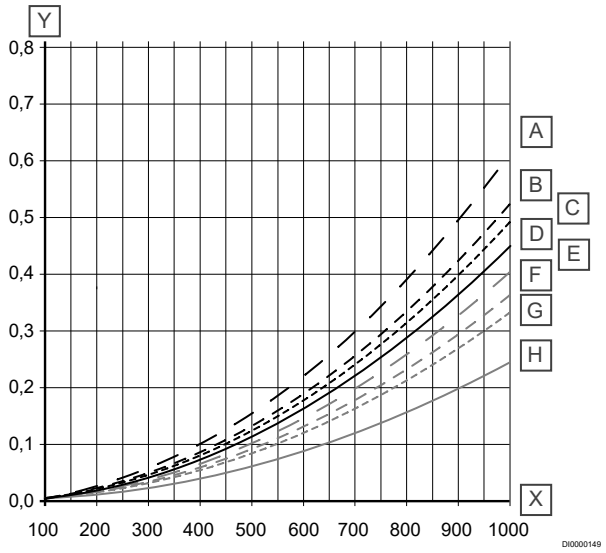

Item	Description
X	Primary heating demand [l/h], max. 1000 l/h

Item	Description
Y	Pressure drop [bar]
Z	Max range

Item	Description
A	HIU with strainer, differential pressure regulator and TL - kvs = 1,18
B	HIU with strainer, including TL - kvs = 1,30
C	HIU without strainer including differential pressure regulator and TL - kvs = 1,26
D	HIU with strainer and differential pressure regulator - kvs = 1,34
E	HIU without strainer including TL - kvs = 1,40
F	HIU without strainer - kvs = 1,52
G	HIU without strainer including differential pressure regulator - kvs = 1,46
H	HIU without strainer - kvs = 1,70

Pressure drops including ball valve. Additional pressure drops, e.g. heatmeter with **Qn 1,5** of approximately **0,05 bar** and other internal/external fixtures must be added.

Domestic hot water side (secondary)

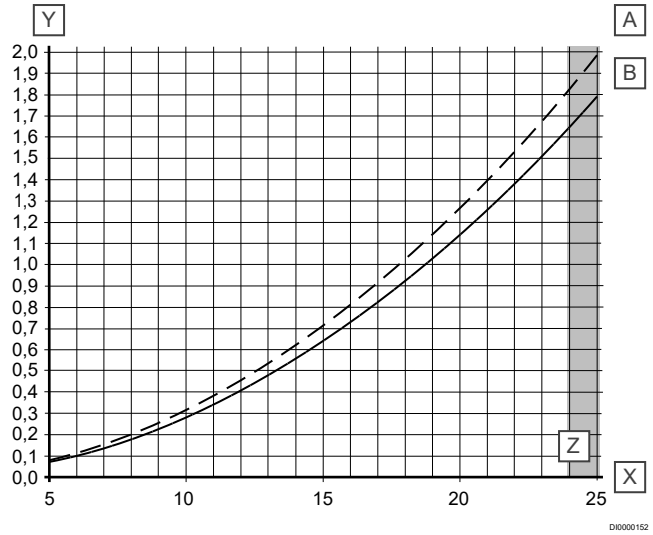

Item	Description
X	Tapping capacity [l/min]
Y	Pressure drop [bar]
Z	Max range

Item	Description
A	HIU without strainer, without throttle disc, including TL - kvs = 1,06
B	HIU without strainer, without throttle disc - kvs = 1,12

The pressure drop at the throttle disc must be added to the calculation.

- 10 l/min = 0,65 - 0,85 bar
- 12 l/min = 0,68 - 0,88 bar
- 15 l/min = 0,70 - 0,90 bar
- 17 l/min = 0,75 - 0,95 bar
- 19 l/min = 1,00 - 1,20 bar

Primary heating demand and return temperatures with heat exchanger 16 plates

Cold water warming 35 K (10-45 °C)

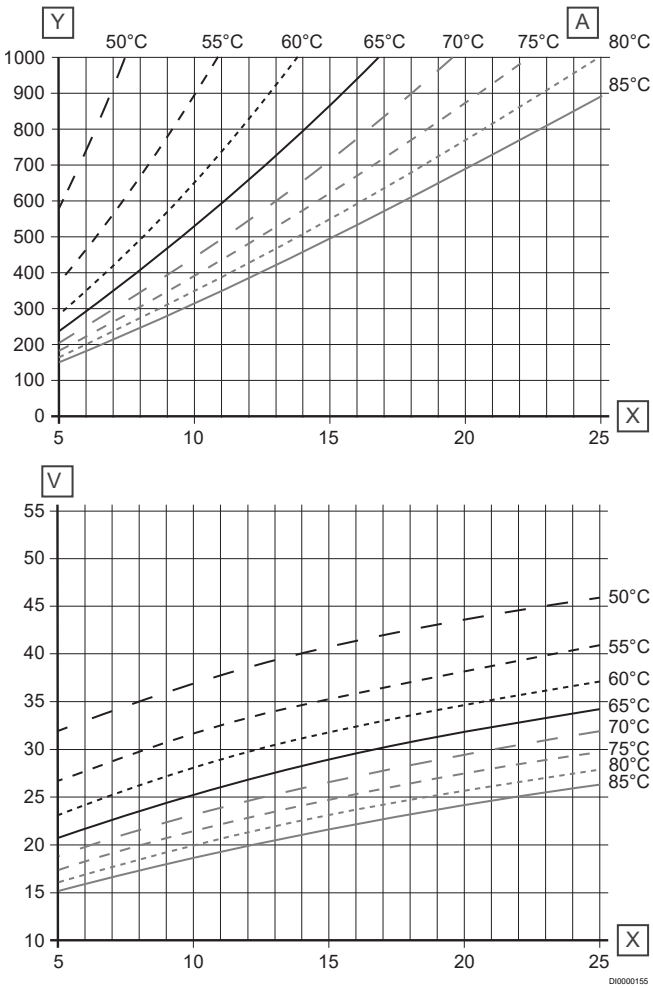

Item	Description
X	Tapping capacity [l/min]
Y	Primary heating demand [l/h], max. 1000 l/h
V	Return temperature [°C]
A	Primary heating supply temperatures

Cold water warming 40 K (10-50 °C)

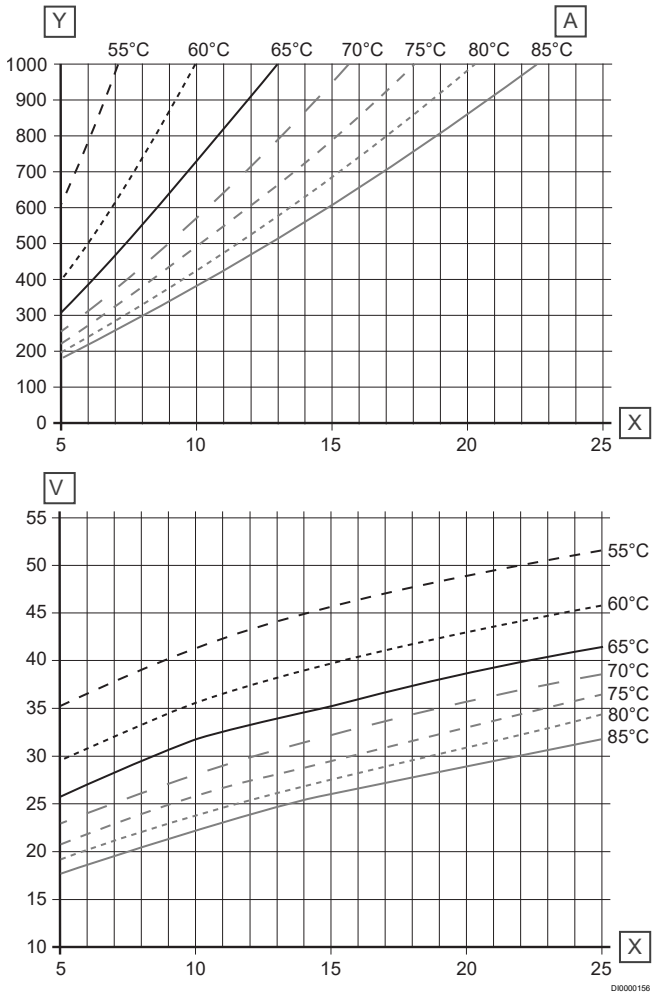

Item	Description
X	Tapping capacity [l/min]
Y	Primary heating demand [l/h], max. 1000 l/h
V	Return temperature [°C]
A	Primary heating supply temperatures

Cold water warming 45 K (10-55 °C)

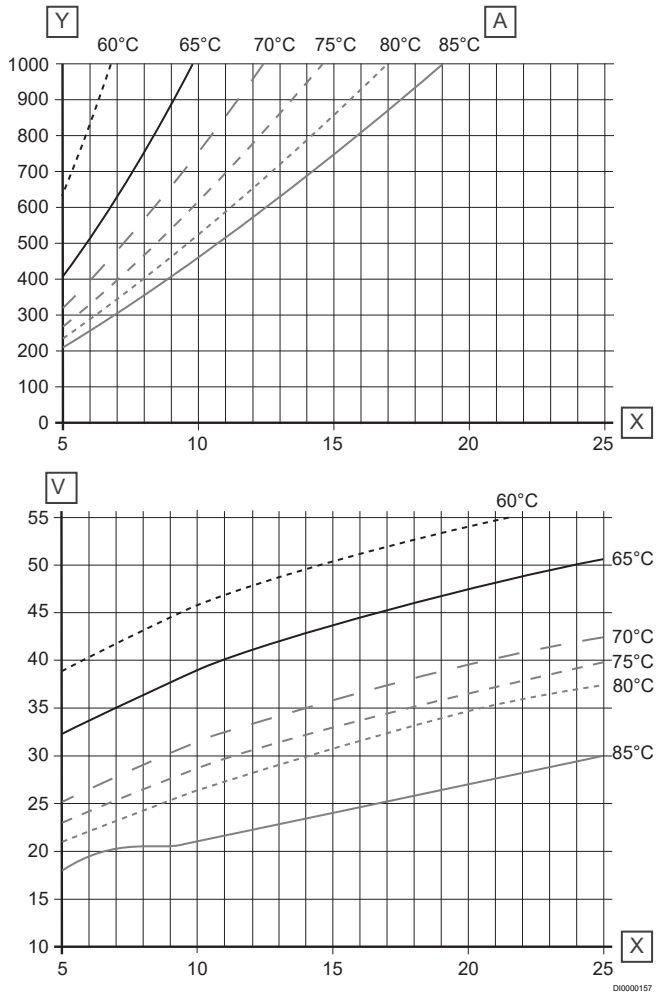

Item	Description
X	Tapping capacity [l/min]
Y	Primary heating demand [l/h], max. 1000 l/h
V	Return temperature [°C]
A	Primary heating supply temperatures

Cold water warming 50 K (10-60°C)

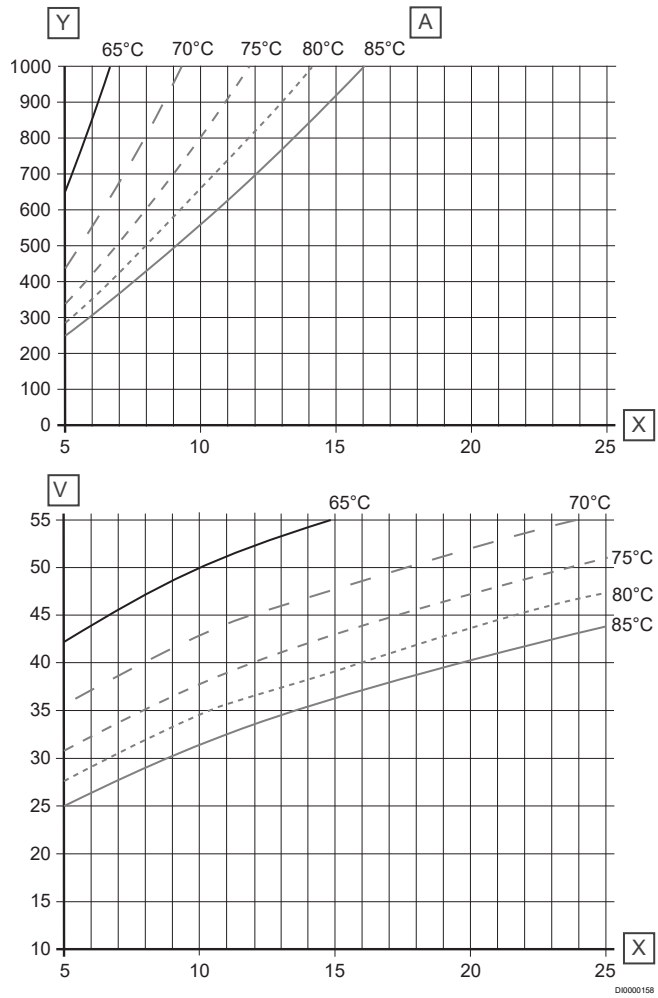

Item	Description
X	Tapping capacity [l/min]
Y	Primary heating demand [l/h], max. 1000 l/h
V	Return temperature [°C]
A	Primary heating supply temperatures

Pressure drop with heat exchanger 24 plates

Heating side (primary)

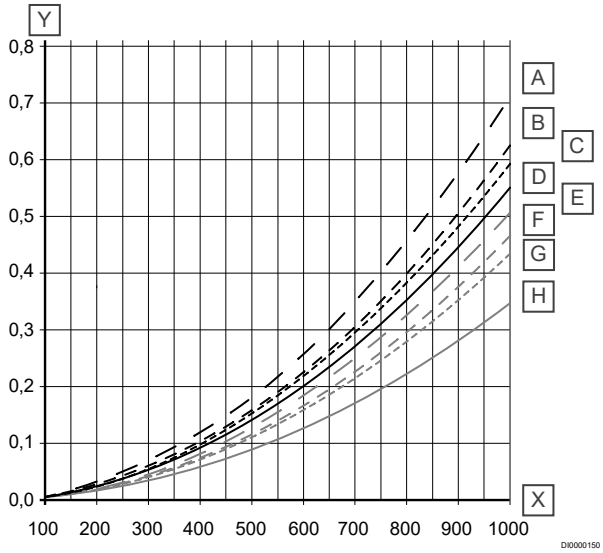

Item	Description
X	Primary heating demand [l/h], max. 1000 l/h
Y	Pressure drop [bar]
Z	Max range

Item	Description
A	HIU with strainer, differential pressure regulator and TL - kvs = 1,18
B	HIU with strainer, including TL - kvs = 1,30
C	HIU without strainer including differential pressure regulator and TL - kvs = 1,26
D	HIU with strainer and differential pressure regulator - kvs = 1,34
E	HIU without strainer including TL - kvs = 1,40
F	HIU without strainer - kvs = 1,52
G	HIU without strainer including differential pressure regulator - kvs = 1,46
H	HIU without strainer - kvs = 1,70

Pressure drops including ball valve. Additional pressure drops, e.g. heatmeter with **Qn 1,5** of approximately **0,05 bar** and other internal/ external fixtures must be added.

Domestic hot water side (secondary)

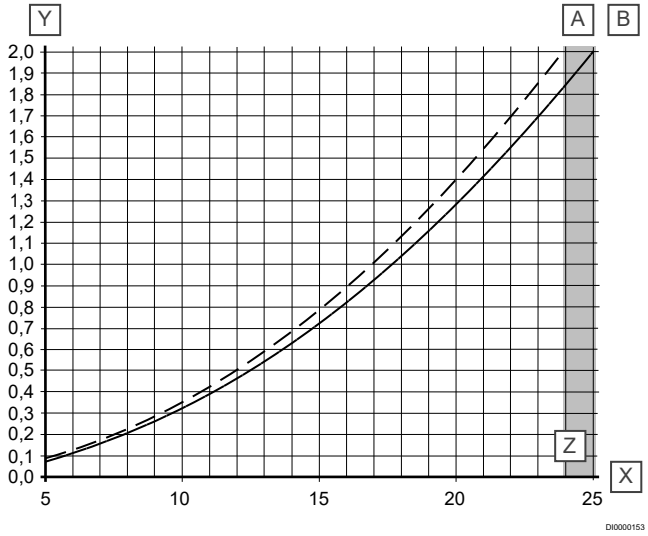

Item	Description
X	Tapping capacity [l/min]
Y	Pressure drop [bar]
Z	Max range

Item	Description
A	HIU without strainer, without throttle disc, including TL - kvs = 1,01
B	HIU without strainer, without throttle disc - kvs = 1,06

The pressure drop at the throttle disc must be added to the calculation.

- 10 l/min = 0,65 - 0,85 bar
- 12 l/min = 0,68 - 0,88 bar
- 15 l/min = 0,70 - 0,90 bar
- 17 l/min = 0,75 - 0,95 bar
- 19 l/min = 1,00 - 1,20 bar

Primary heating demand and return temperatures with heat exchanger 24 plates

Cold water warming 35 K (10-45 °C)

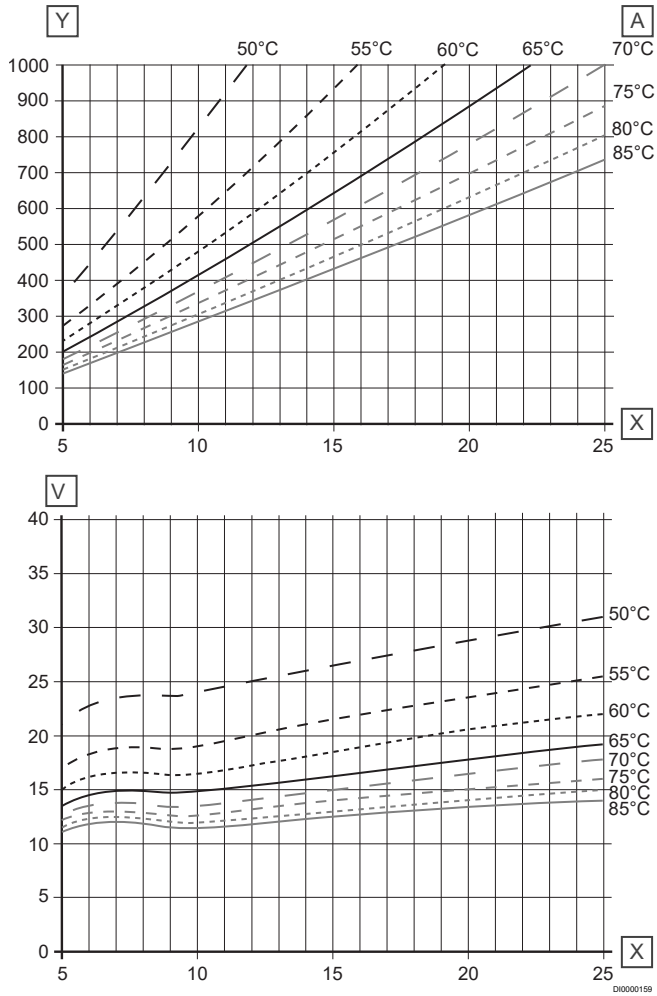

Item	Description
X	Tapping capacity [l/min]
Y	Primary heating demand [l/h], max. 1000 l/h
V	Return temperature [°C]
A	Primary heating supply temperatures

Cold water warming 40 K (10-50 °C)

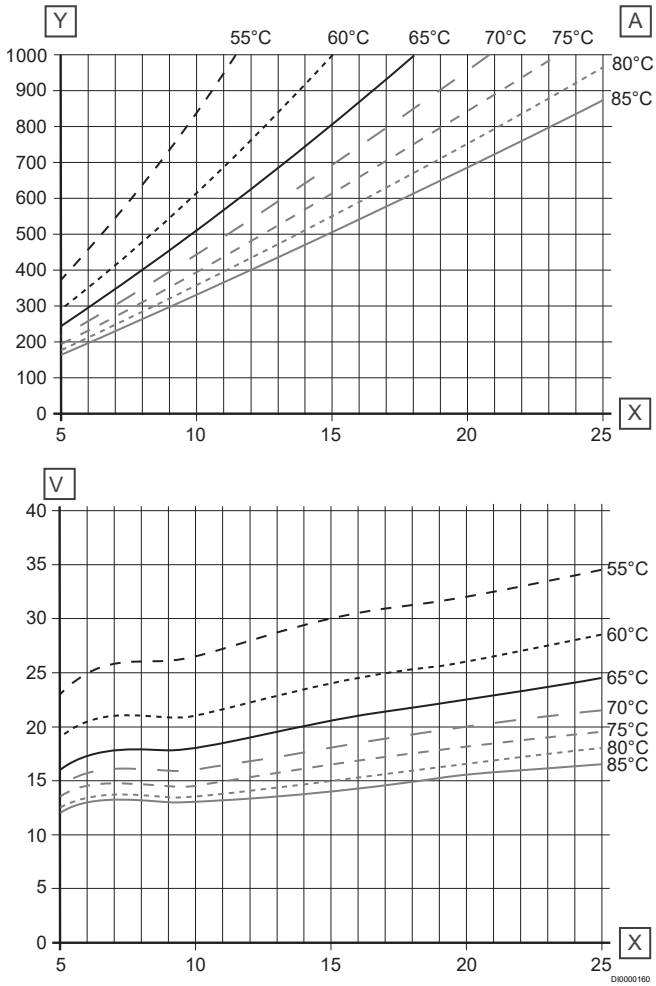

Item	Description
X	Tapping capacity [l/min]
Y	Primary heating demand [l/h], max. 1000 l/h
V	Return temperature [°C]
A	Primary heating supply temperatures

Cold water warming 45 K (10-55 °C)

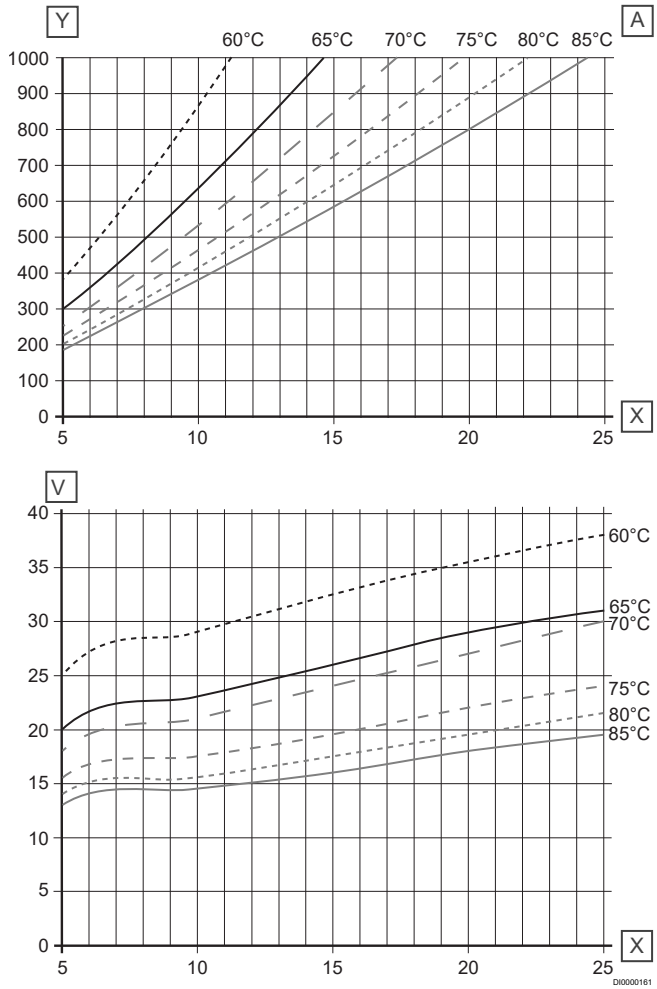

Item	Description
X	Tapping capacity [l/min]
Y	Primary heating demand [l/h], max. 1000 l/h
V	Return temperature [°C]
A	Primary heating supply temperatures

Cold water warming 50 K (10-60°C)

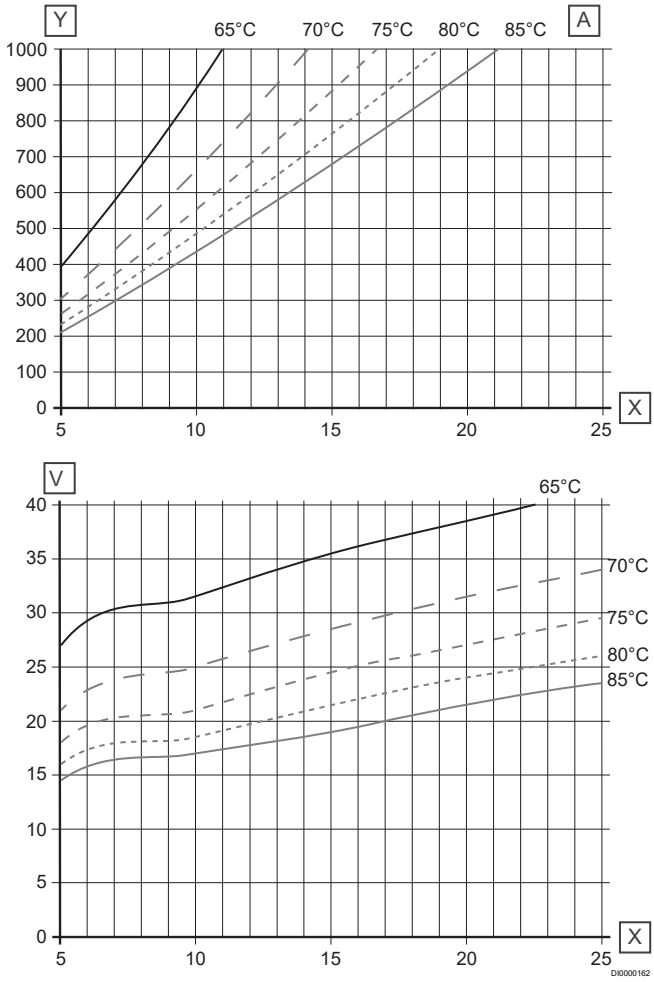

Item	Description
X	Tapping capacity [l/min]
Y	Primary heating demand [l/h], max. 1000 l/h
V	Return temperature [°C]
A	Primary heating supply temperatures

Pressure drop with heat exchanger 40 plates

Heating side (primary)

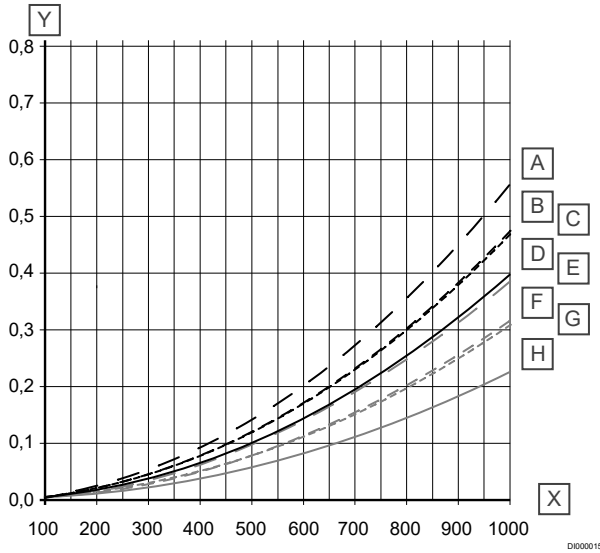

Item	Description
X	Primary heating demand [l/h], max. 1000 l/h
Y	Pressure drop [bar]
Z	Max range

Item	Description
A	HIU with strainer, differential pressure regulator and TL - kvs = 1,18
B	HIU with strainer, including TL - kvs = 1,30
C	HIU without strainer including differential pressure regulator and TL - kvs = 1,26
D	HIU with strainer and differential pressure regulator - kvs = 1,34
E	HIU without strainer including TL - kvs = 1,40
F	HIU without strainer - kvs = 1,52
G	HIU without strainer including differential pressure regulator - kvs = 1,46
H	HIU without strainer - kvs = 1,70

Pressure drops including ball valve. Additional pressure drops, e.g. heatmeter with **Qn 1,5** of approximately **0,05 bar** and other internal/ external fixtures must be added.

Domestic hot water side (secondary)

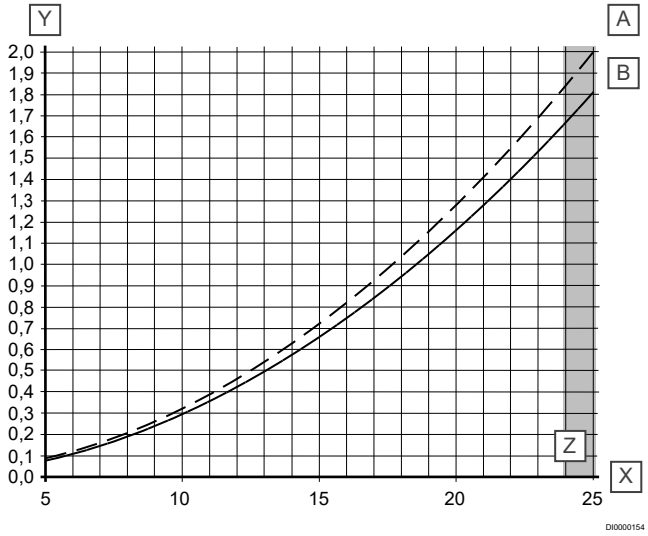

Item	Description
X	Tapping capacity [l/min]
Y	Pressure drop [bar]
Z	Max range

Item	Description
A	HIU without strainer, without throttle disc, including TL - kvs = 1,01
B	HIU without strainer, without throttle disc - kvs = 1,06

The pressure drop at the throttle disc must be added to the calculation.

- 10 l/min = 0,65 - 0,85 bar
- 12 l/min = 0,68 - 0,88 bar
- 15 l/min = 0,70 - 0,90 bar
- 17 l/min = 0,75 - 0,95 bar
- 19 l/min = 1,00 - 1,20 bar

Primary heating demand and return temperatures with heat exchanger 40 plates

Cold water warming 35 K (10-45 °C)

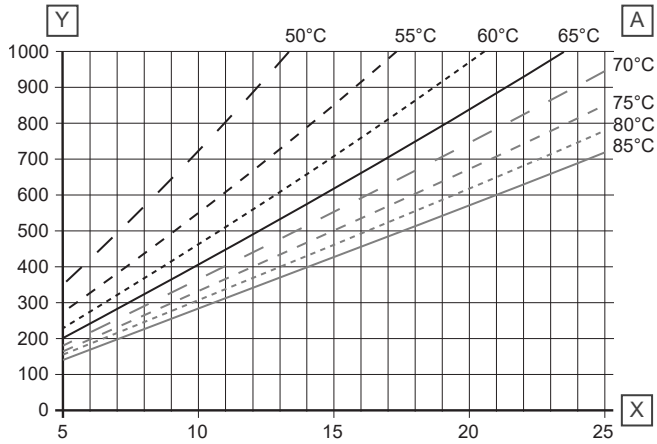

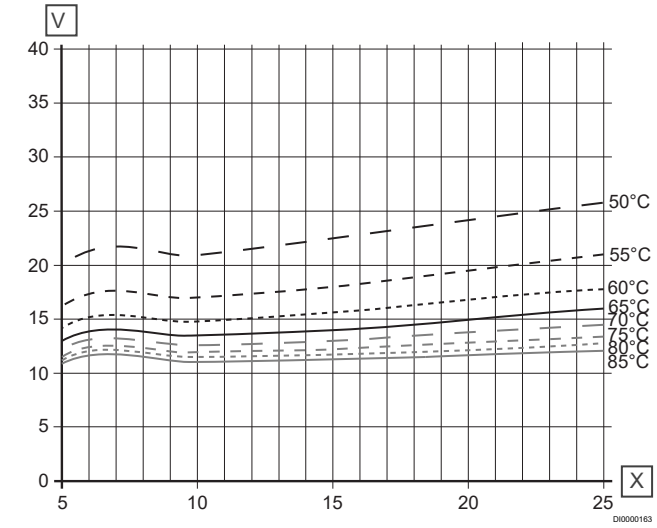

Item	Description
X	Tapping capacity [l/min]
Y	Primary heating demand [l/h], max. 1000 l/h
V	Return temperature [°C]
A	Primary heating supply temperatures

Cold water warming 40 K (10-50 °C)

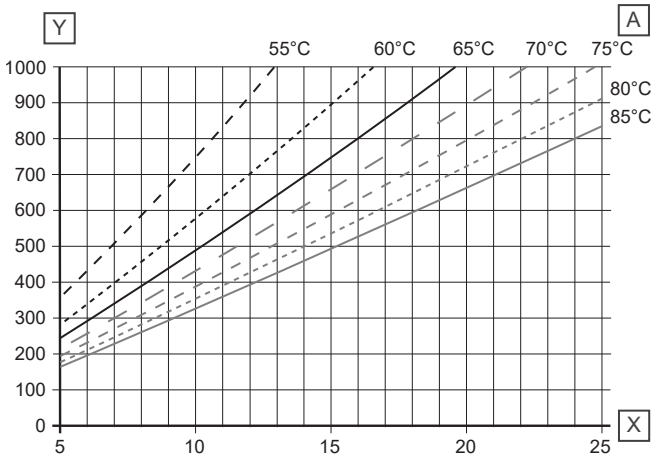

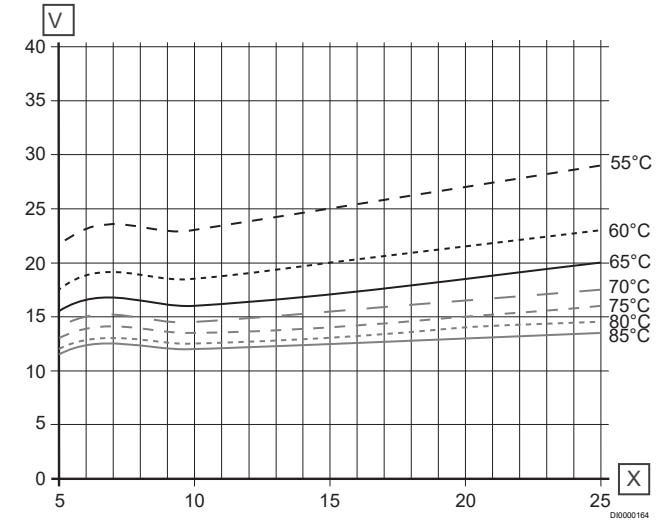

Item	Description
X	Tapping capacity [l/min]
Y	Primary heating demand [l/h], max. 1000 l/h
V	Return temperature [°C]
A	Primary heating supply temperatures

Cold water warming 45 K (10-55 °C)

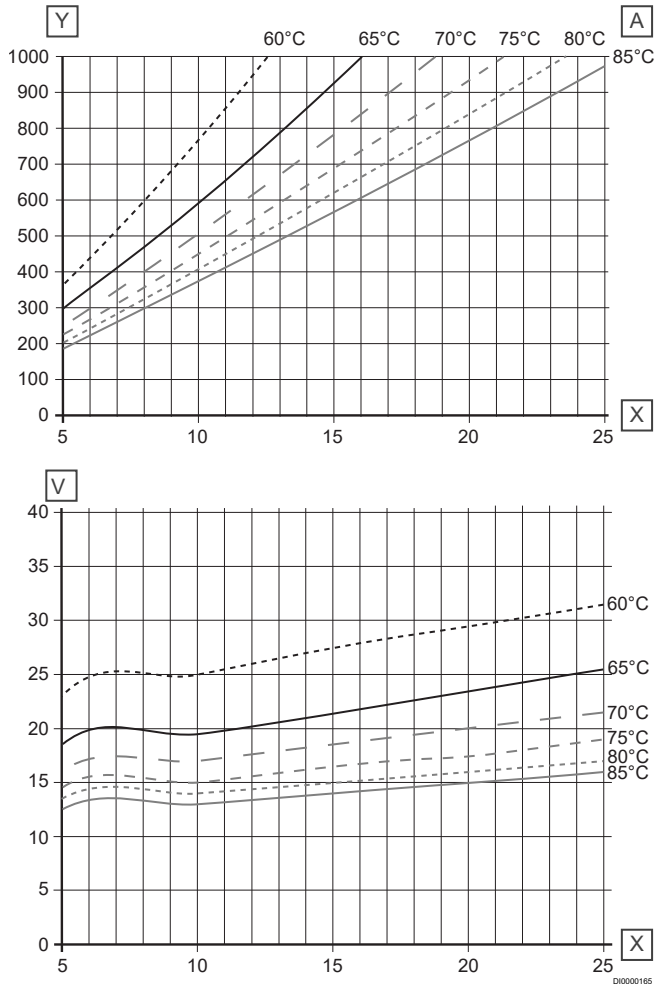

Item	Description
X	Tapping capacity [l/min]
Y	Primary heating demand [l/h], max. 1000 l/h
V	Return temperature [°C]
A	Primary heating supply temperatures

Cold water warming 50 K (10-60°C)

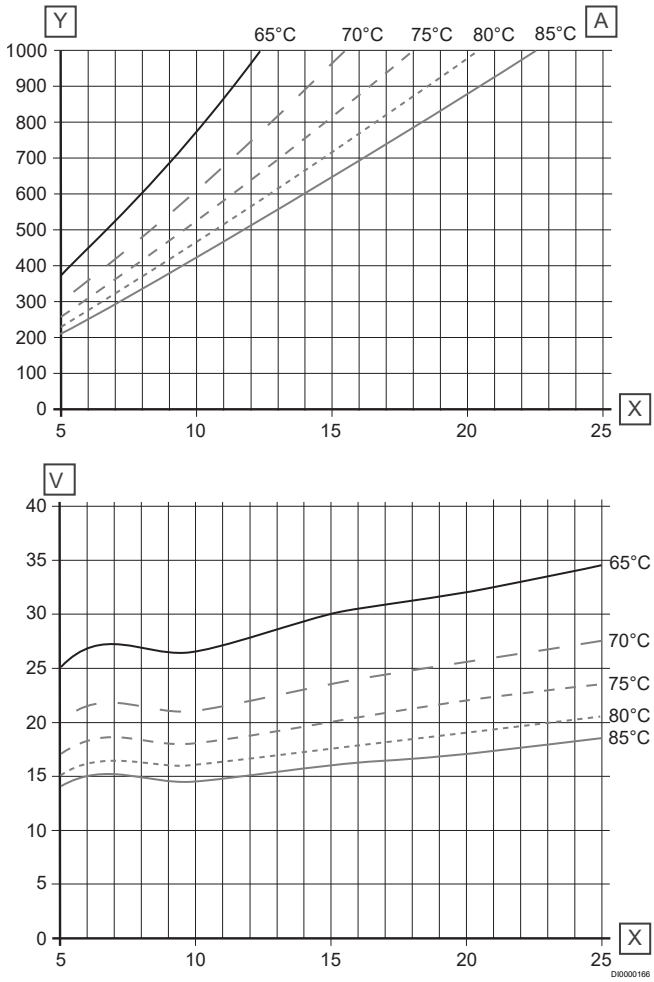

Item	Description
X	Tapping capacity [l/min]
Y	Primary heating demand [l/h], max. 1000 l/h
V	Return temperature [°C]
A	Primary heating supply temperatures

11 Uponor Combi Port M-INS/Uponor Aqua Port M-INS

11.1 Operating principle (2pipe system)

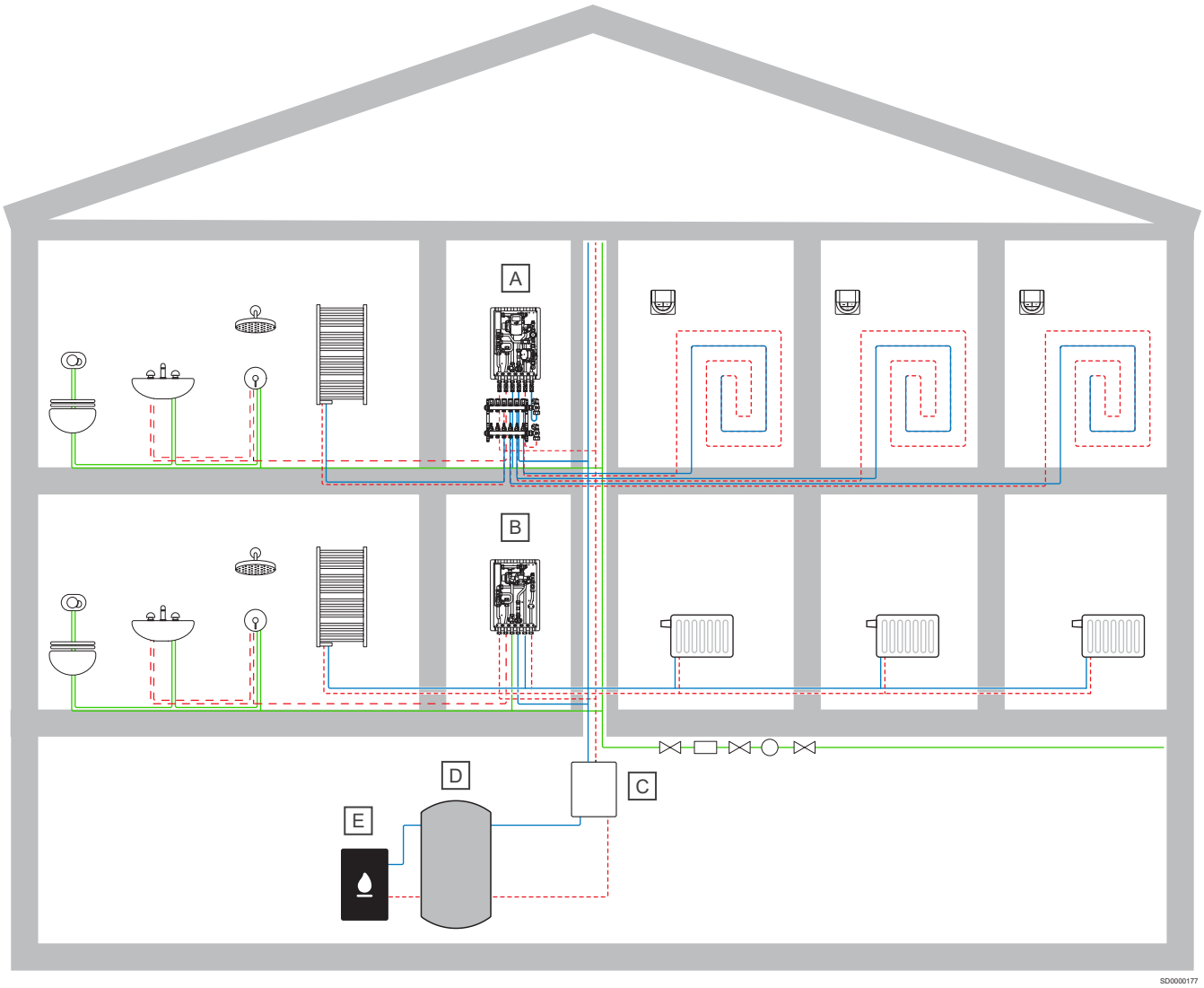

Item	Description
A	Uponor Combi Port M-INS for domestic hot water preparation and underfloor heating
B	Uponor Combi Port M-INS for domestic hot water preparation and radiator heating

Item	Description
C	System pump group
D	Buffer storage tank
E	Heat source

11.2 Functional description

This prefabricated heat interface unit (HIU) is available in the three following versions, further customisation is available.

1. **Uponor Aqua Port M-INS:**
   Handles supply of domestic hot water in single or multi family houses.
2. **Uponor Combi Port M-INS (radiator connection):**
   Handles supply of domestic hot water and heating in single or multi family houses while potentially measuring the heating energy.

In the Combi Port units, the cold water is heated only when required following the flow-through principle with a high performance plate heat exchanger made of stainless steel. This always ensures low return temperatures on the heating water. The energy is supplied by

heating water with a flow temperature of at least 55 °C via the heating water flow.

Domestic hot water:

The domestic hot water is generated only on demand. A mechanical proportional volume control valve controlls the process. The valve opens only when hot water is required so heating water can flow through the heat exchanger. This ensures a constant hot water temperature. Without demand the valve is closed. No heating water flows and the heat exchanger can cool down. This is beneficial for the hygiene.

Domestic heating:

The Combi Port M-INS units independently manage the hydraulic balancing between hot water and heating. The room temperature can be controlled with the Uponor Smatrix, Uponor Flexiboard or the Uponor Base controller.

11.3 Types and components

Item	Description
A	EPP cover
B	Plate heat exchanger
C	Water hammer arrester
D	Proportional volume control (PM)
E	Cold water throttle disc in the screw connection
F	Zone valve for limiting heating flow to the flat
G	Sensor pocket heat meter
H	Strainer
L	Backflow preventer in the screw connection
M	Thermostatic lead module (BP)
N	Thermostatic hot water temperature limiter (TL)
O	Air vent valve
Q	Injection valve with thermal 3-point actuator
R	Backflow preventer in the screw connection
S	Differential pressure regulator (DI)
T	Heating pump
U	Heat meter distance piece
V	Strainer

Uponor Combi Port M-INS (radiator connection)

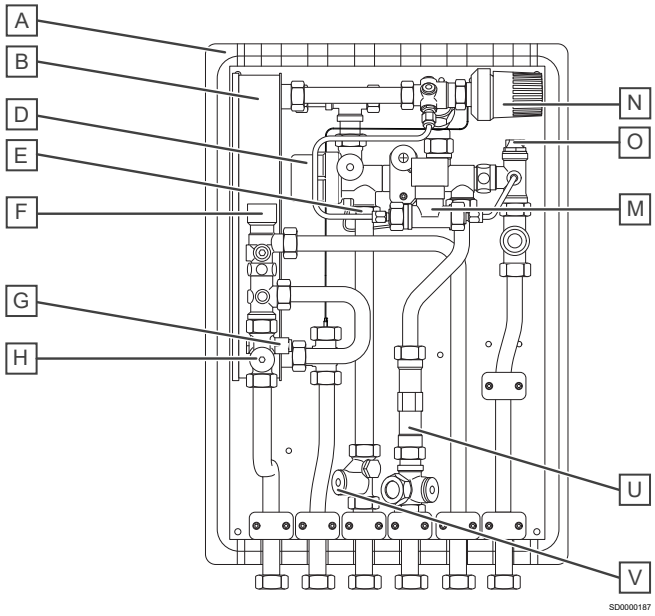

Uponor Combi Port M-INS (underfloor heating)

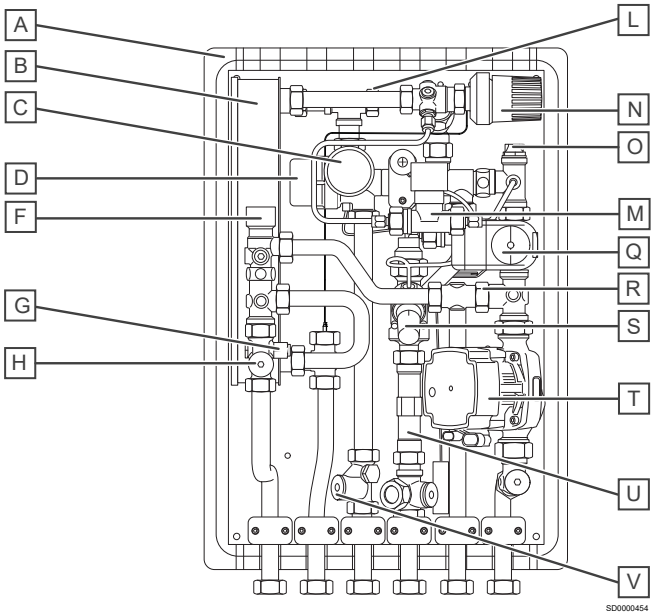

Uponor Aqua Port M-INS

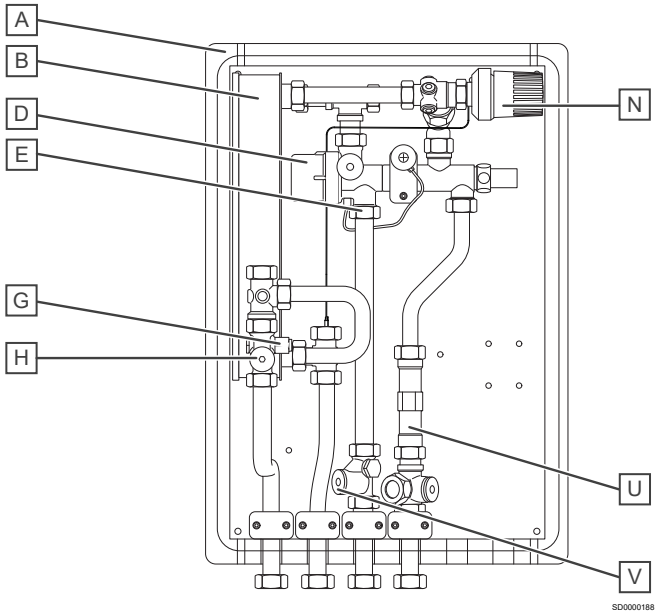

Connection description

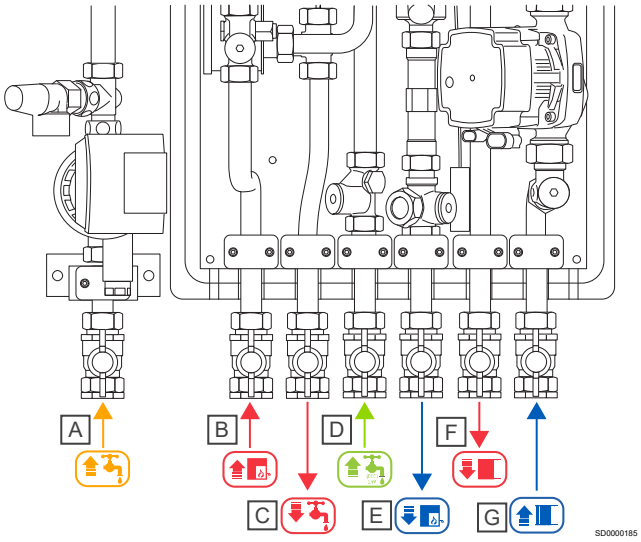

Item	Description
A	Warm tap water with circulation
B	Heating supply (primary)
C	Domestic hot water to apartment (PWH)
D	Cold water from riser (PWC)
E	Heating return (primary)
F	Heating supply (secondary)
G	Heating return (secondary)

11.4 Hydraulic schemes

Uponor Combi Port M-INS (radiator connection) with Uponor Smatrix Wave

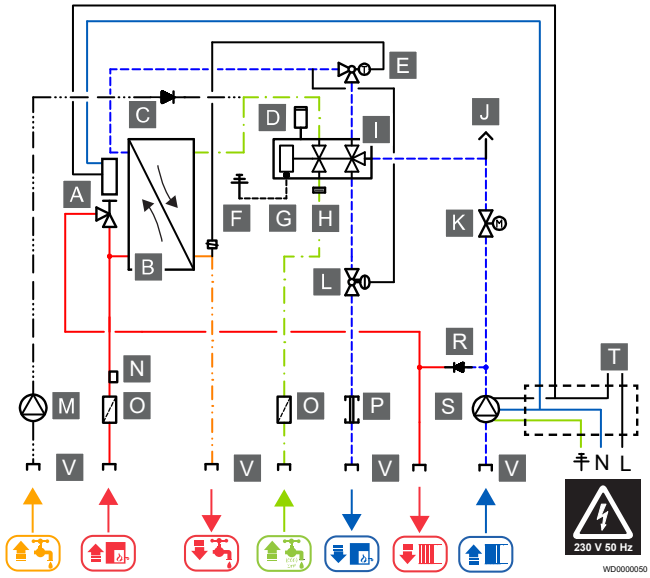

Uponor Combi Port M-INS (underfloor heating) with Uponor Smatrix Move

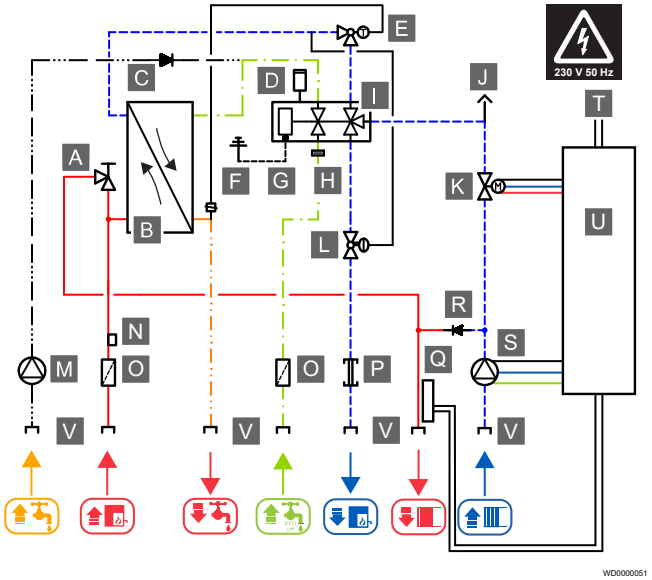

Item	Description
A	Zone valve
B	Heat exchanger
C	Back flow preventer
D	Water hammer arrester
E	Thermostatic hot water temperature limiter (TL)
F	Earthing on site
G	Equipotential bonding connection
H	Throttle disc
I	Proportional volume control (PM)
J	Venting screw
K	Zone valve (ZV) (optional with thermal 3-point actuator)
L	Differential pressure regulator (DI)
M	Circulation module with safety valve (ZM)
N	Sensor pocket
O	Strainer
P	Heat meter distance piece
Q	Supply temperature sensor Uponor Smatrix Move
R	Back flow preventer
S	Heating pump
T	Uponor Smatrix Wave
U	Uponor Smatrix Move
V	Swivel nut

11.5 Technical data

HIU	Value
Medium	Heating water in accordance with local regulations and standards, for example VDI 2035
Operating temperature	5–85 °C

Domestic hot water	Value
Tapping capacity (at primary heating supply 65 °C and water heating 40 K, 10 °C cold water to 50 °C hot water)	Heat exchanger 40 plates: 19 l/min
Max. operating pressure	PN 10
Min. pressure (must comply with the domestic water supplier standards)	2,0 bar

Primary heating	Value
Max. operating pressure	PN 10
Differential pressure	0,6 bar

Space heating (Uponor Vario manifold)	Value
Medium	Heating water in accordance with local regulations and standards, for example VDI 2035
Operating temperature	5–60 °C
Operating pressure	6 bar

Material	Value
Fittings and valves, sanitary	CW617N, certification: DVGW, UBA
Fittings, heating	CW617N, CW614N
Flat gaskets	certification: VDI 2200, DVGW, FDA, GL, EG 1935/2004, TA Luft, VP 401,W270, WRAS, in accordance with guidelines, domestic water, elastomer (KTW)
Plate heat exchanger	1.4404 stainless steel, depending on HIU • copper-brazed (CB)
Pipes	1.4401 Stainless steel

Dimensions/Weight	Value
Dimensions	refer to the dimensional drawings
Weight	
Uponor Aqua Port M-INS	11 kg
Uponor Combi Port M-INS	16 kg

Pipe connections	Value
through ball valves	G 3/4, IG flat sealing

Optimal water quality	Value
See chapter "Water quality for heat interface units"	

11.6 Dimensional drawings

Note

The illustrations below show example setups. The individual modules can have different appearances.

Uponor Aqua Port M-INS

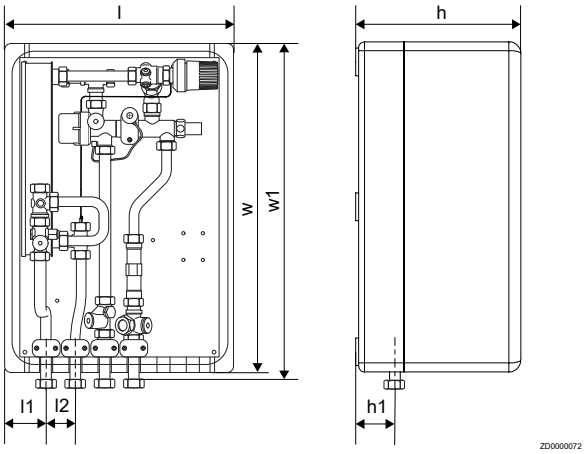

l	l1	l2	w	w1
390 mm	70 mm	50 mm	560 mm	578 mm

h	h1			
280 mm	67 mm			

Uponor Combi Port M-INS (radiator connection)

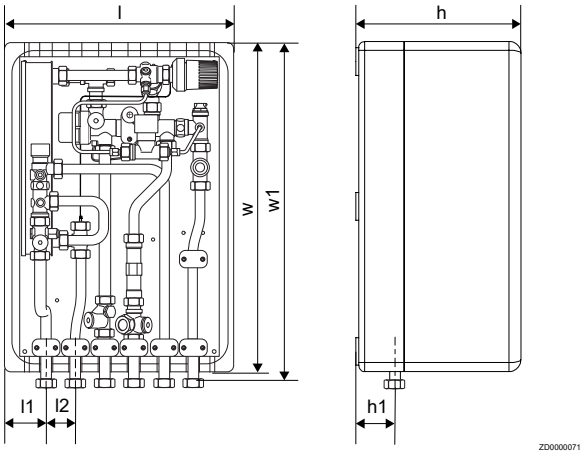

l	l1	l2	w	w1
390 mm	70 mm	50 mm	560 mm	578 mm

h	h1			
280 mm	67 mm			

11.7 Performance diagrams

Pressure drop with heat exchanger 40 plates

Heating side (primary)

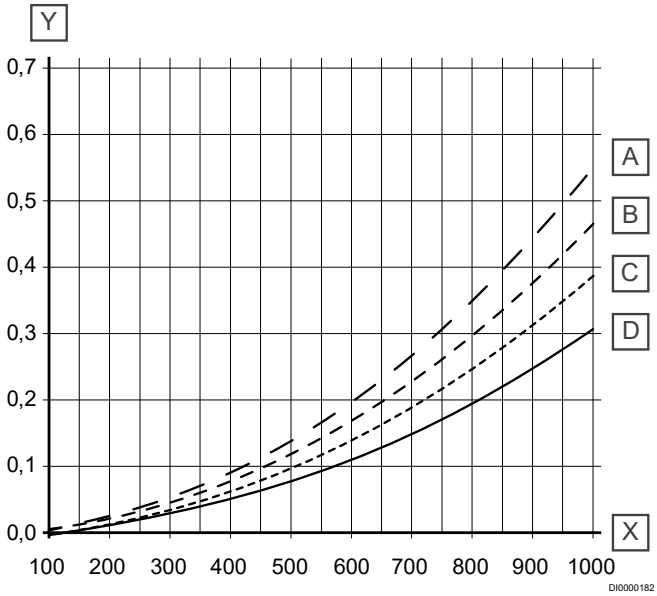

Item	Description
X	Primary heating demand [l/h], max. 1000 l/h
Y	Pressure drop [bar]
Z	Max range

Item	Description
A	HIU with differential pressure regulator and TL - kvs = 1,35
B	HIU with TL - kvs = 1,47
C	HIU with differential pressure regulator - kvs = 1,61
D	HIU - kvs = 1,81

Pressure drops including ball valve. Additional pressure drops, e.g. heatmeter with **Qn 1,5** of approximately **0,05 bar** and other internal/external fixtures must be added.

Domestic hot water side (secondary)

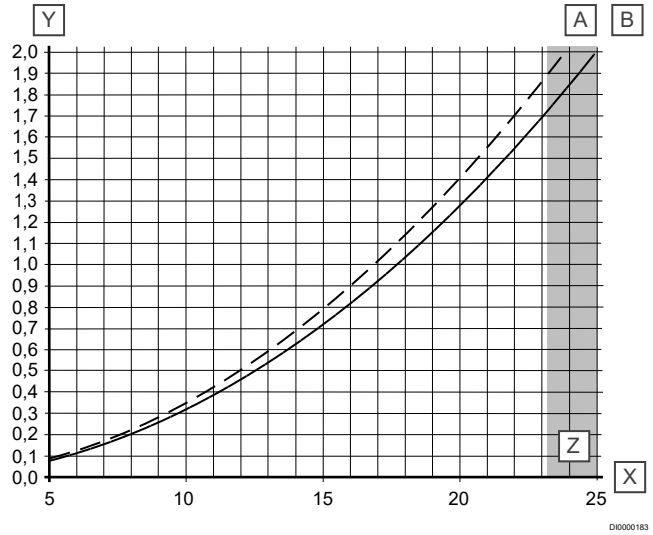

Item	Description
X	Tapping capacity [l/min]
Y	Pressure drop [bar]
Z	Max range

Item	Description
A	HIU without throttle disc, including TL - kvs = 1,01
B	HIU without throttle disc - kvs = 1,06

Pressure drops at the throttle disc must be added to the calculation.

- 10 l/min = 0,65 - 0,85 bar
- 12 l/min = 0,68 - 0,88 bar
- 15 l/min = 0,70 - 0,90 bar
- 17 l/min = 0,75 - 0,95 bar
- 19 l/min = 1,00 - 1,20 bar

Primary heating demand and return temperatures with heat exchanger 40 plates

Cold water warming 35 K (10-45 °C)

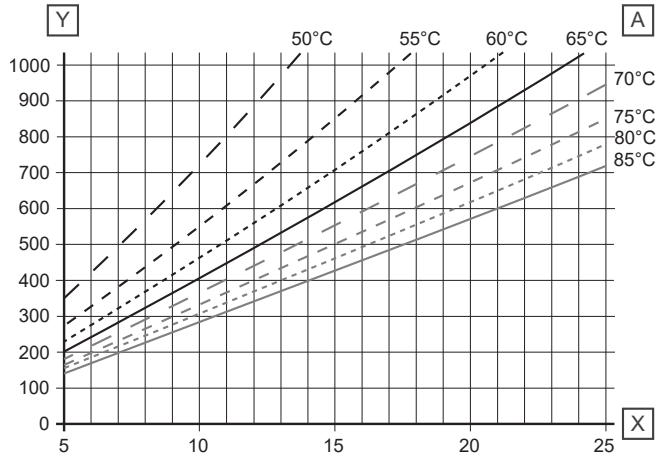

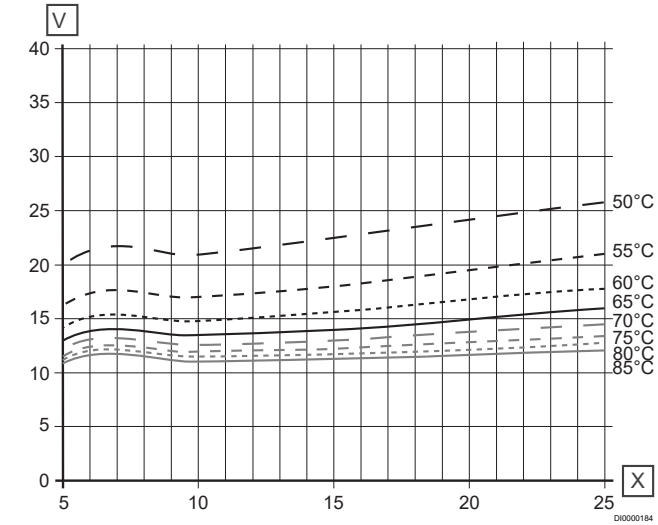

Item	Description
X	Tapping capacity [l/min]
Y	Primary heating demand [l/h], max. 1000 l/h
V	Return temperature [°C]
A	Primary heating supply temperatures

Cold water warming 40 K (10-50 °C)

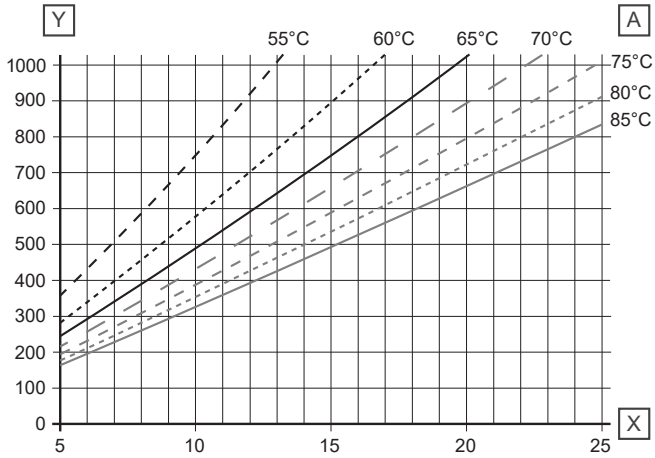

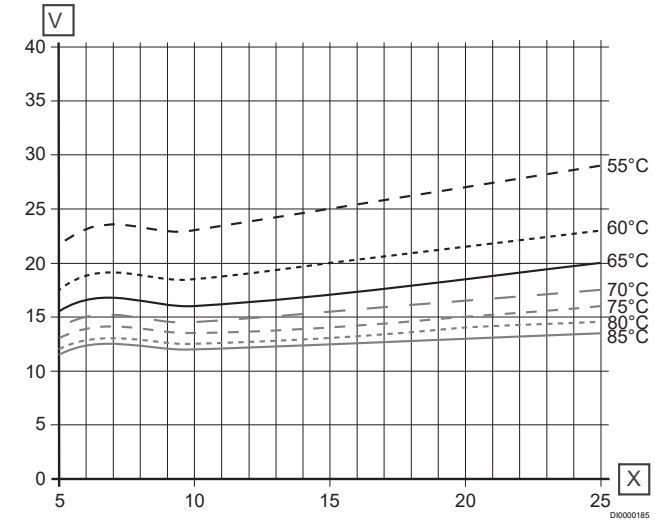

Item	Description
X	Tapping capacity [l/min]
Y	Primary heating demand [l/h], max. 1000 l/h
V	Return temperature [°C]
A	Primary heating supply temperatures

Cold water warming 45 K (10-55 °C)

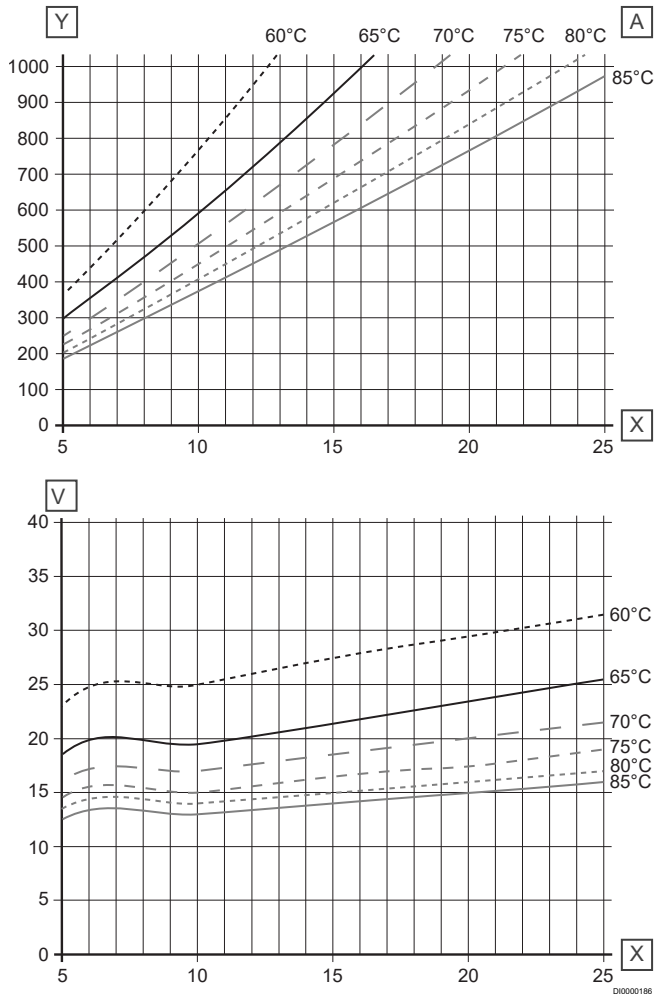

Item	Description
X	Tapping capacity [l/min]
Y	Primary heating demand [l/h], max. 1000 l/h
V	Return temperature [°C]
A	Primary heating supply temperatures

Cold water warming 50 K (10-60°C)

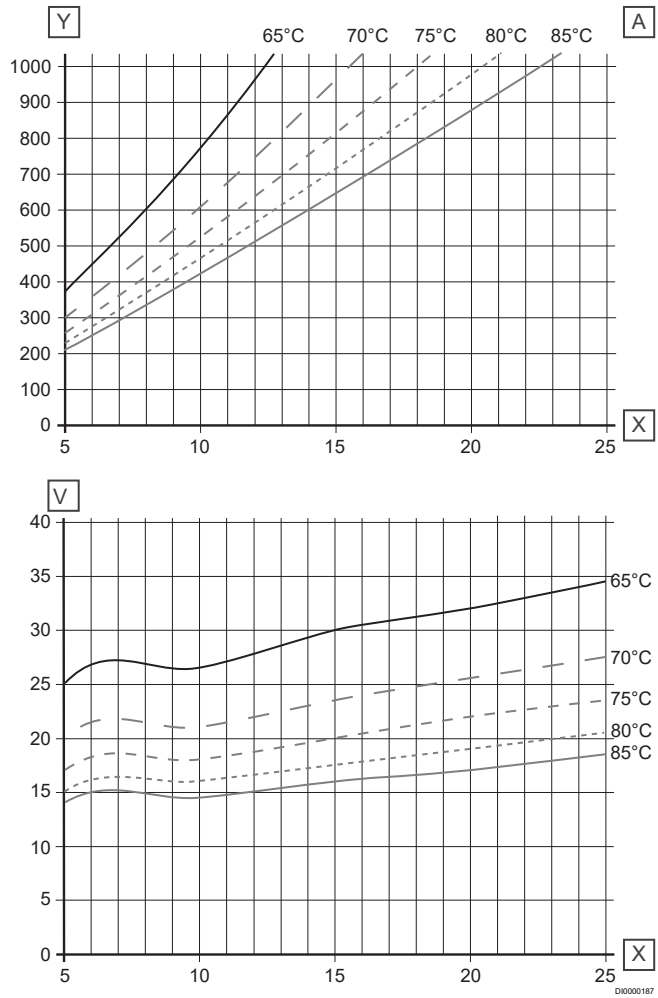

Item	Description
X	Tapping capacity [l/min]
Y	Primary heating demand [l/h], max. 1000 l/h
V	Return temperature [°C]
A	Primary heating supply temperatures

12 Uponor Aqua Port M-XS

12.1 Operating principle (Domestic hot water preparation)

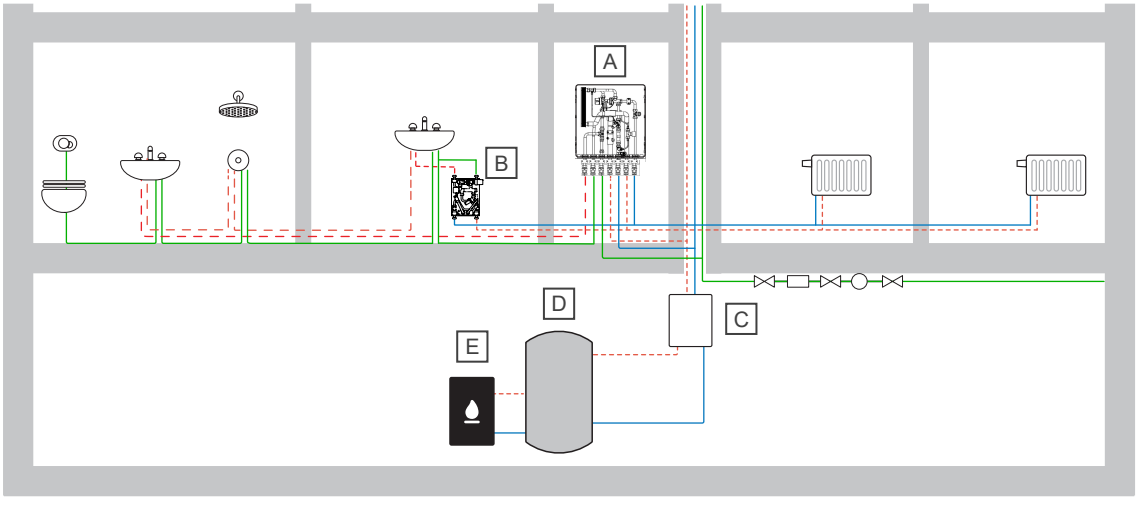

Item	Description
A	Uponor Combi Port heat interface unit
B	Uponor Aqua Port M-XS for domestic hot water preparation
C	System pump group

Item	Description
D	Buffer storage tank
E	Heat source

12.2 Functional description

The Uponor Aqua Port M-XS is used when there is a greater distance between the point of use (kitchen, bathroom, or guest toilet) and the hot water risers. The system prepares the hot water on demand directly at the point of use, eliminating the need for additional cold and hot water riser installations and hot water circulation systems.

Further important advantages are the optimal drinking water hygiene (no need for sampling at the tap) or the elimination of additional drinking water supply lines or circulation systems.

12.3 Types and components

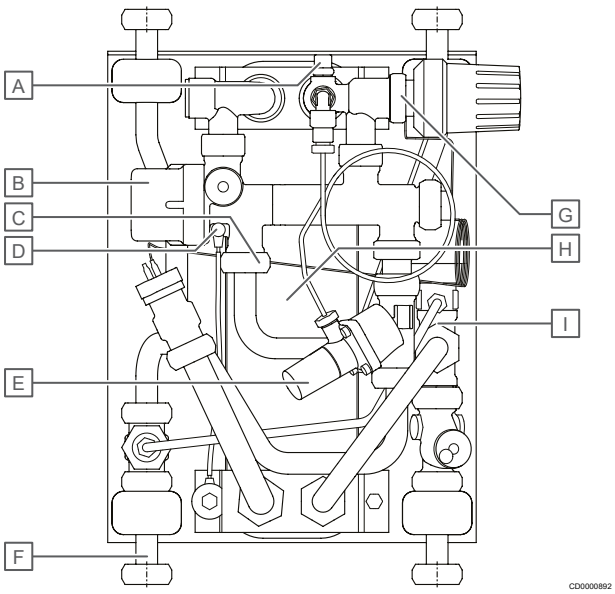

Item	Description
A	Venting screw
B	Proportional volume control (PM)
C	Cold water throttle disc in the screw connection
D	Equipotential bonding connection and Earthing on site
E	Differential pressure regulator (DI)
F	Connection G3/4
G	Thermostatic hot water temperature limiter (TL)
H	Plate heat exchanger
I	Thermostatic lead module (BP)

Connection description

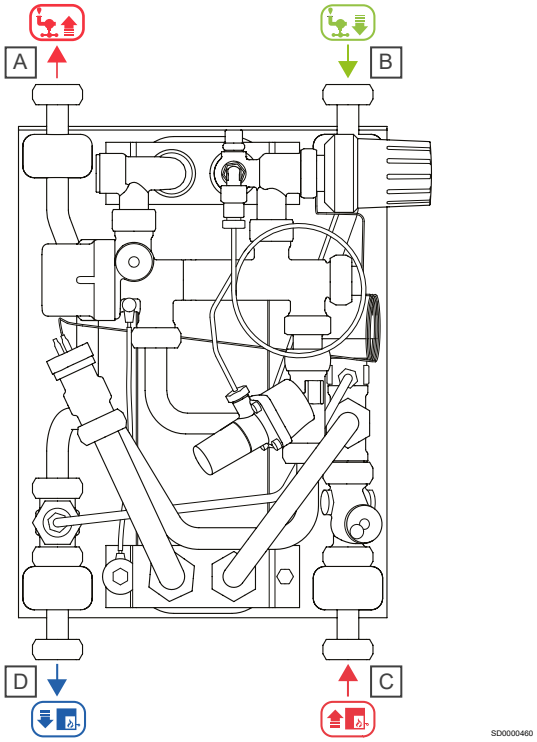

Item	Description
A	Domestic hot water to apartment (PWH)
B	Cold water from riser (PWC)
C	Heating supply (primary)
D	Heating return (primary)

12.4 Hydraulic schemes

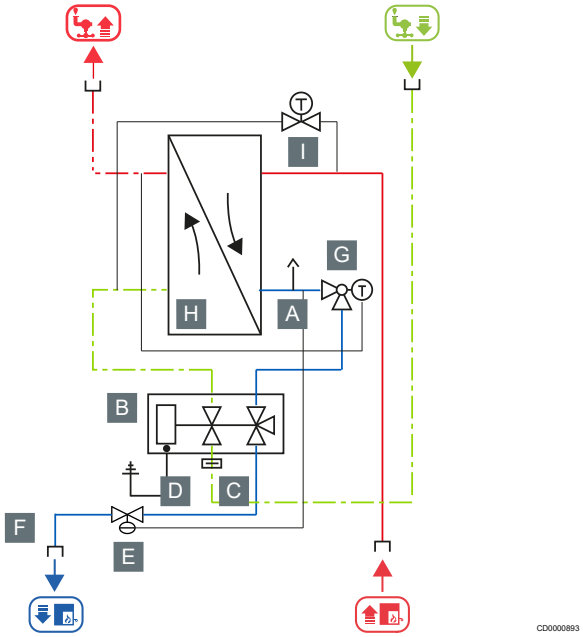

Item	Description
A	Venting screw
B	Proportional volume control (PM)
C	Cold water throttle disc in the screw connection
D	Equipotential bonding connection and Earthing on site
E	Differential pressure regulator (DI)
F	Connection G3/4
G	Thermostatic hot water temperature limiter (TL)
H	Plate heat exchanger
I	Thermostatic lead module (BP)

12.5 Technical data

HIU	Value
Medium	Heating water in accordance with local regulations and standards, for example VDI 2035
Operating temperature	5–85 °C

Domestic hot water	Value
Tapping capacity (at primary heating supply 65 °C and water heating 40 K, 10 °C cold water to 50 °C hot water)	Heat exchanger 24 plates: 15 l/min Heat exchanger 40 plates: 19 l/min
Max. operating pressure	PN 10
Min. pressure (must comply with the domestic water supplier standards)	2,0 bar

Primary heating	Value
Max. operating pressure	PN 10
Differential pressure	0,6 bar

Material	Value
Fittings and valves, sanitary	CW617N, certification: DVGW, UBA
Fittings, heating	CW617N, CW614N
Flat gaskets	certification: VDI 2200, DVGW, FDA, GL, EG 1935/2004, TA Luft, VP 401,W270, WRAS, in accordance with guidelines, domestic water, elastomer (KTW)
Plate heat exchanger	1.4404 stainless steel, depending on HIU • free of non-ferrous metal soldered (St)
Pipes	1.4401 Stainless steel

Electric connection - electric heater	Value
Power supply 230 V, 50 Hz	Operates without an electrical connection.

Dimensions/Weight	Value
Dimensions	refer to the dimensional drawings
Weight	7–8 kg

Pipe connections	Value
through ball valves	G 3/4, IG flat sealing

Optimal water quality	Value
See chapter "Water quality for heat interface units"	

12.6 Dimensional drawings

Note

The illustrations below show example setups. The individual modules can have different appearances.

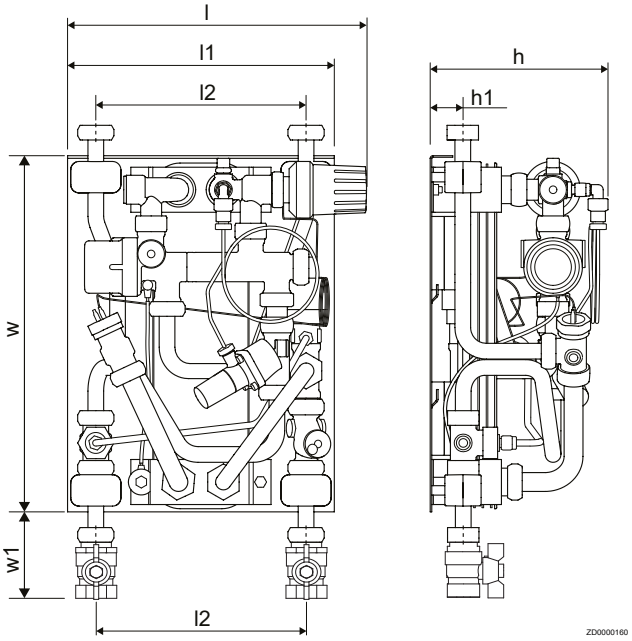

l	l1	l2	h	h1	w	w1
283 mm	255 mm	200 mm	167 mm	32 mm	340 mm	82 mm

12.7 Performance diagrams

Pressure drop with heat exchanger 24 plates

Heating side (primary)

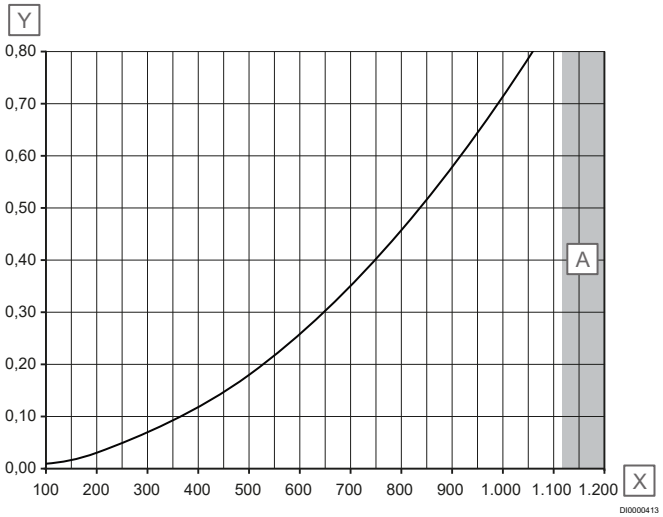

Item	Description
X	Primary heating demand [l/h], max. 1000 l/h
Y	Pressure drop [bar]
A	Max range

Pressure drops including ball valve. Additional pressure drops, e.g. heatmeter with **Qn 1,5** of approximately **0,05 bar** and other internal/ external fixtures must be added.

Domestic hot water side (secondary)

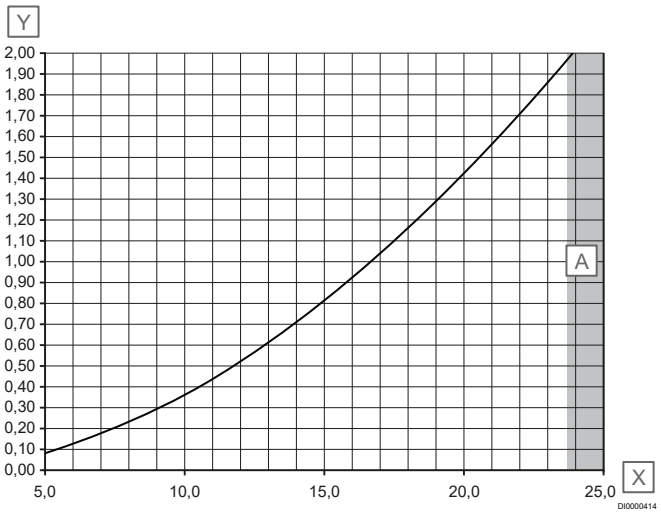

Item	Description
X	Primary heating demand [l/h], max. 1000 l/h
Y	Pressure drop [bar]
A	Max range

Additional pressure drops of other external fixtures in the fresh water installation must be included.

Primary heating demand and return temperatures with heat exchanger 24 plates

Cold water warming 35 K (10-45 °C)

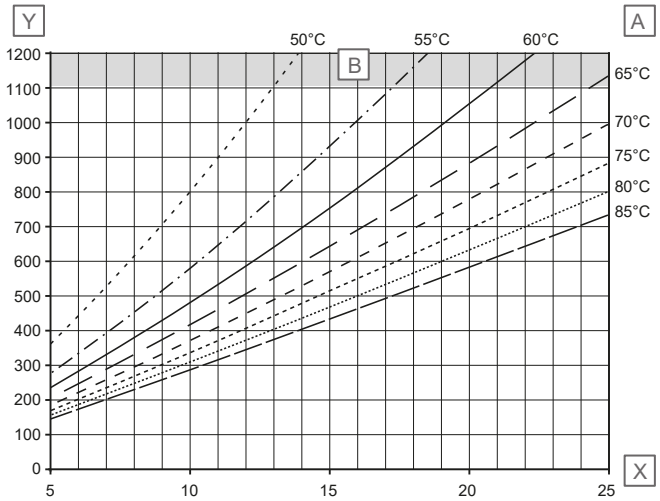

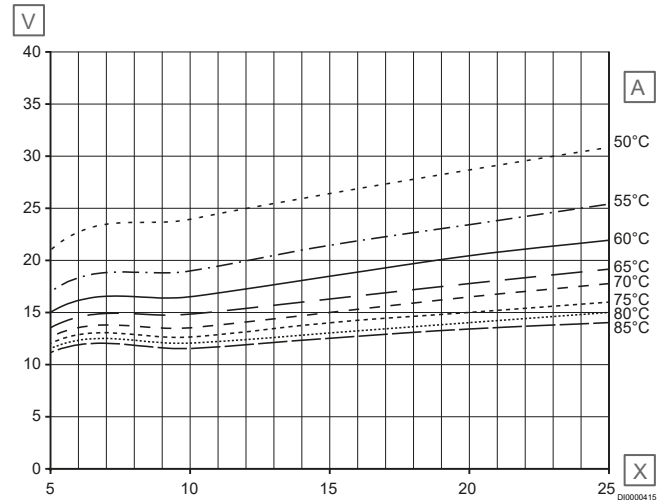

Item	Description
X	Tapping capacity [l/min]
Y	Primary heating demand [l/h], max. 1000 l/h
V	Return temperature [°C]
A	Primary heating supply temperatures
B	Max range

Cold water warming 40 K (10-50 °C)

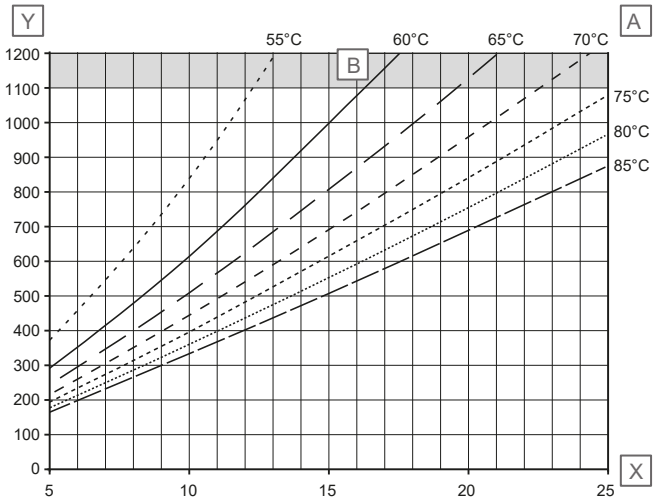

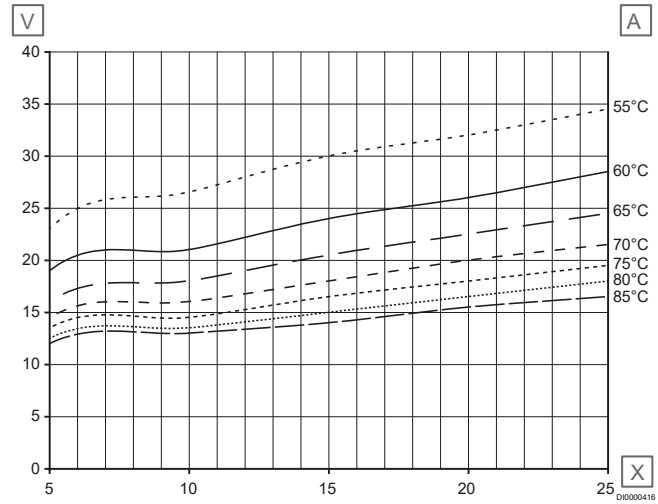

Item	Description
X	Tapping capacity [l/min]
Y	Primary heating demand [l/h], max. 1000 l/h
V	Return temperature [°C]
A	Primary heating supply temperatures
B	Max range

Cold water warming 45 K (10-55 °C)

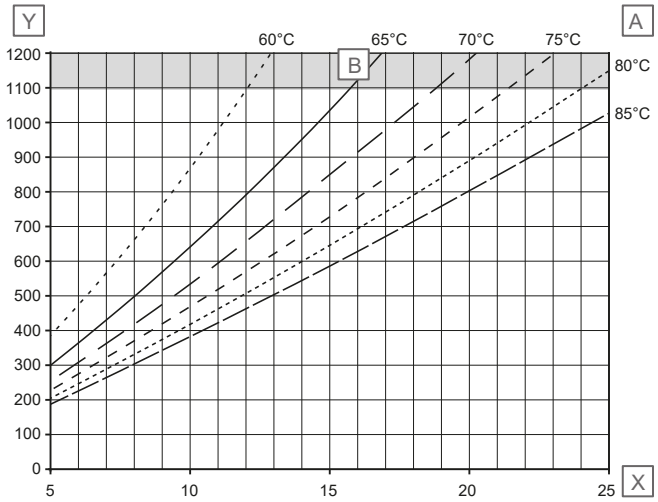

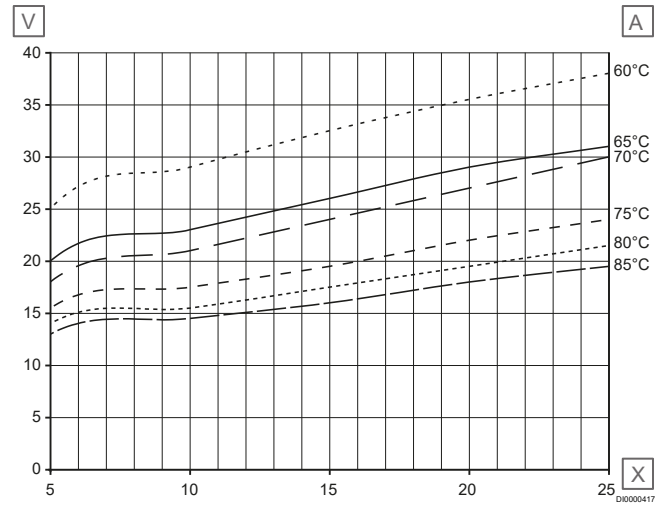

Item	Description
X	Tapping capacity [l/min]
Y	Primary heating demand [l/h], max. 1000 l/h
V	Return temperature [°C]
A	Primary heating supply temperatures
B	Max range

Cold water warming 50 K (10-60°C)

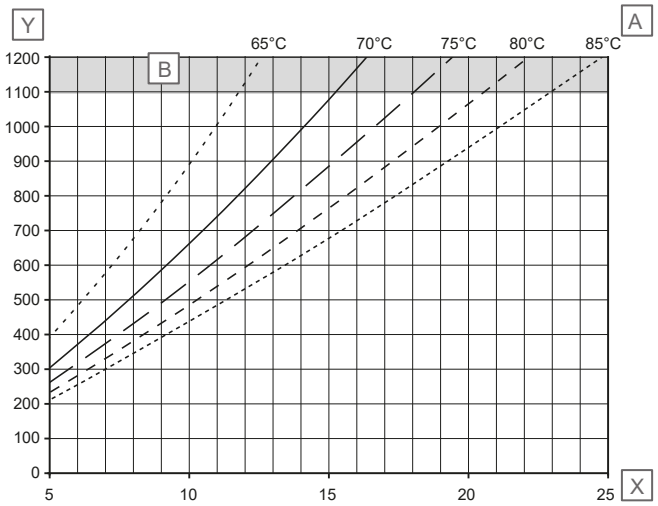

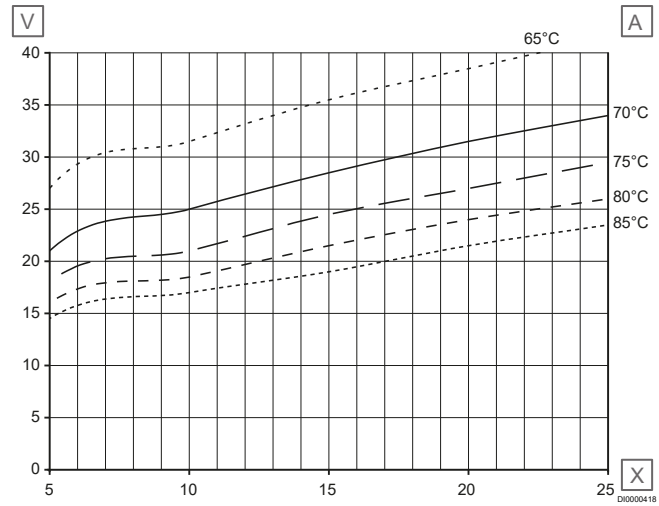

Item	Description
X	Tapping capacity [l/min]
Y	Primary heating demand [l/h], max. 1000 l/h
V	Return temperature [°C]
A	Primary heating supply temperatures
B	Max range

Pressure drop with heat exchanger 40 plates

Heating side (primary)

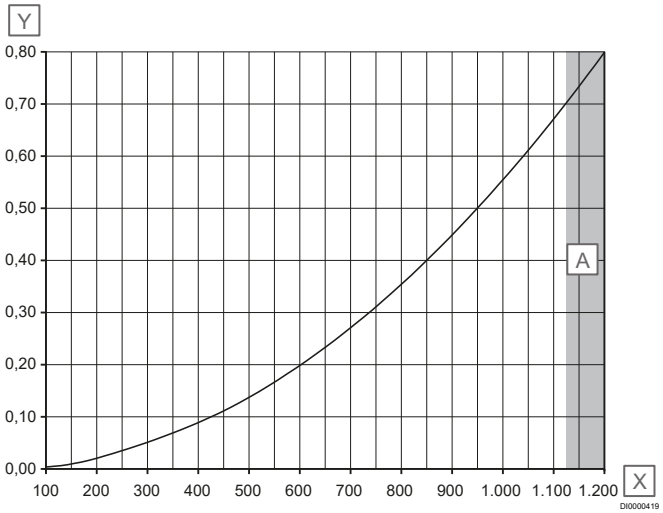

Item	Description
X	Primary heating demand [l/h], max. 1000 l/h
Y	Pressure drop [bar]
A	Max range

Pressure drops including ball valve. Additional pressure drops, e.g. heatmeter with **Qn 1,5** of approximately **0,05 bar** and other internal/ external fixtures must be added.

Domestic hot water side (secondary)

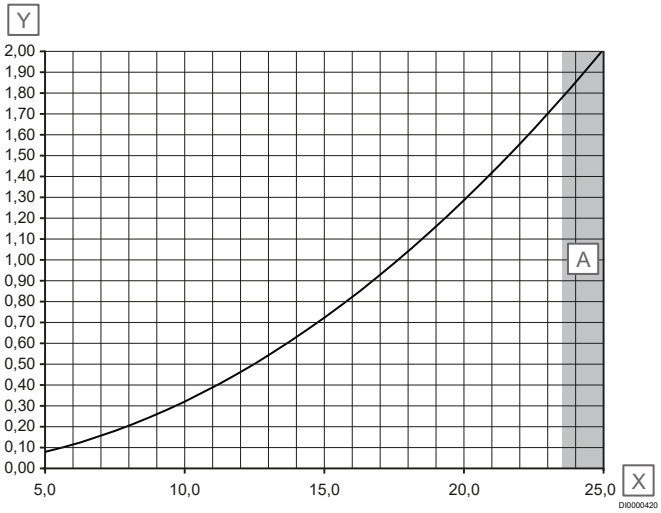

Item	Description
X	Primary heating demand [l/h], max. 1000 l/h
Y	Pressure drop [bar]
A	Max range

Additional pressure drops of other external fixtures in the fresh water installation must be included.

Primary heating demand and return temperatures with heat exchanger 40 plates

Cold water warming 35 K (10-45 °C)

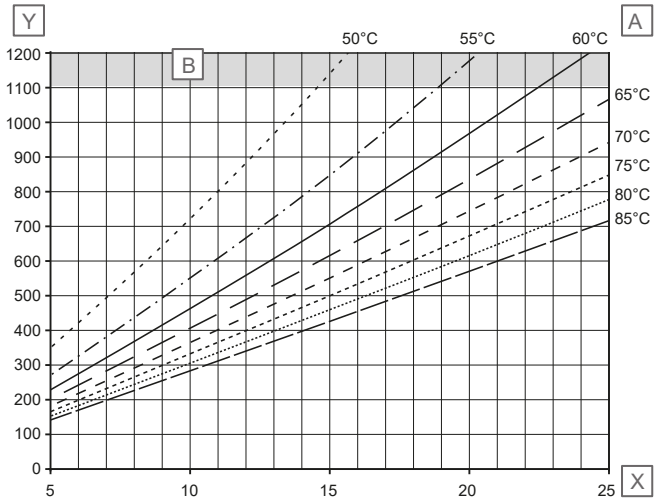

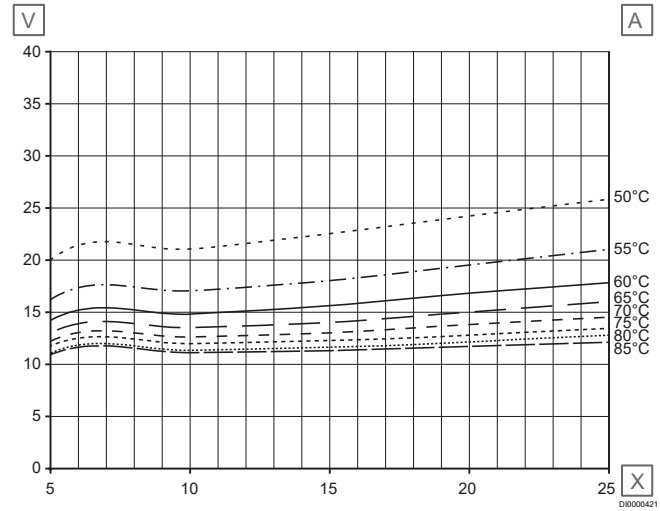

Item	Description
X	Tapping capacity [l/min]
Y	Primary heating demand [l/h], max. 1000 l/h
V	Return temperature [°C]
A	Primary heating supply temperatures
B	Max range

Cold water warming 40 K (10-50 °C)

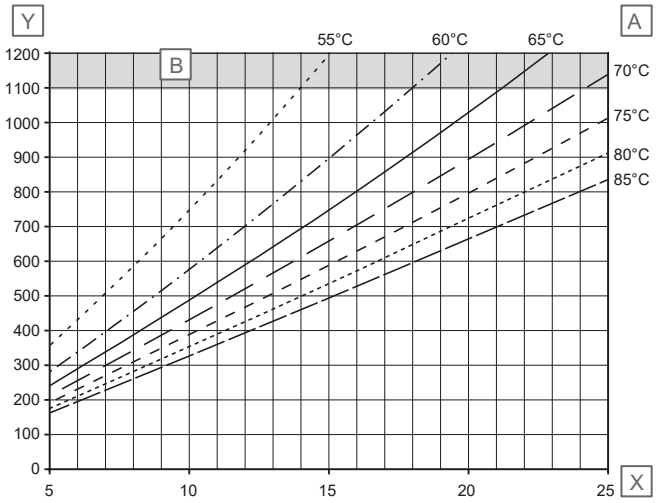

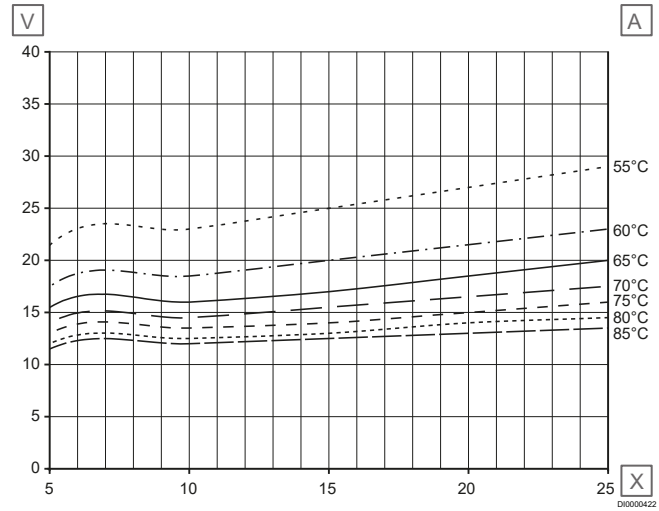

Item	Description
X	Tapping capacity [l/min]
Y	Primary heating demand [l/h], max. 1000 l/h
V	Return temperature [°C]
A	Primary heating supply temperatures
B	Max range

Cold water warming 45 K (10-55 °C)

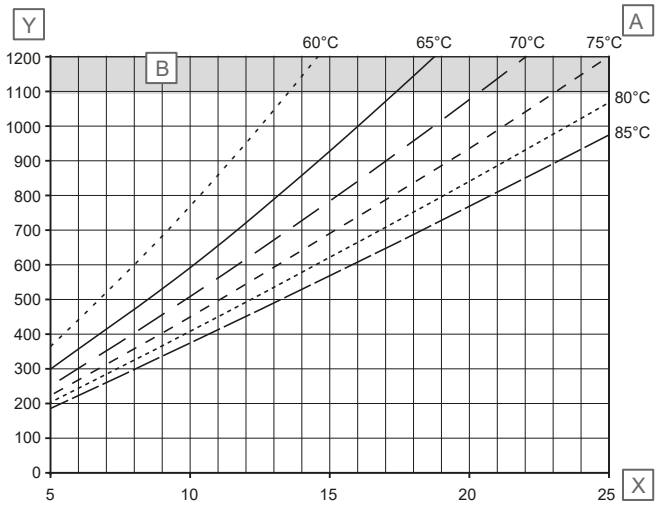

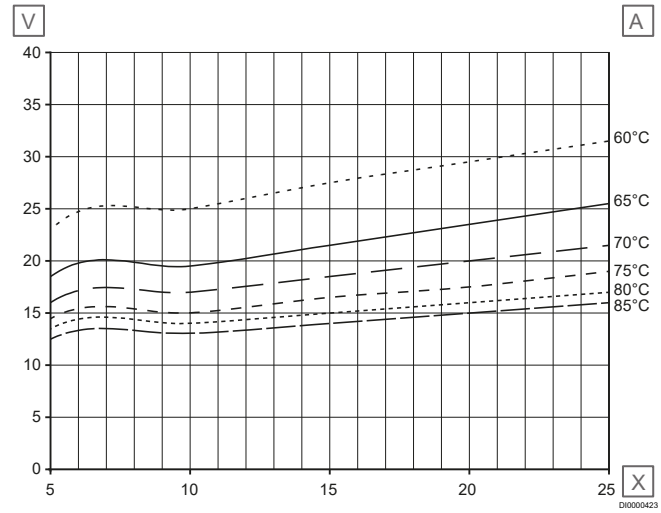

Item	Description
X	Tapping capacity [l/min]
Y	Primary heating demand [l/h], max. 1000 l/h
V	Return temperature [°C]
A	Primary heating supply temperatures
B	Max range

Cold water warming 50 K (10-60°C)

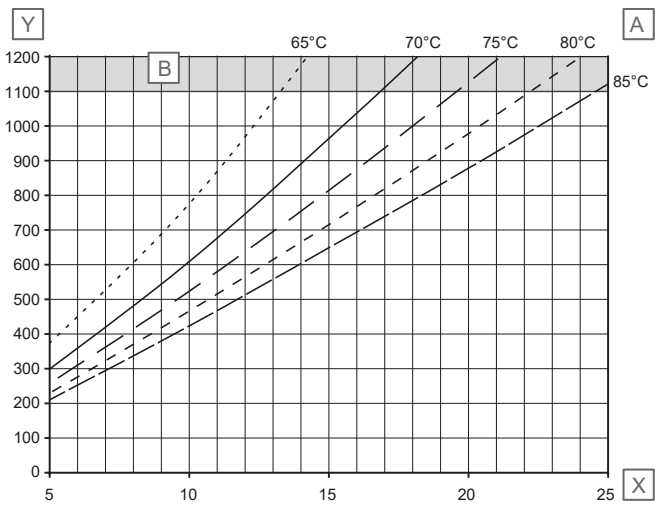

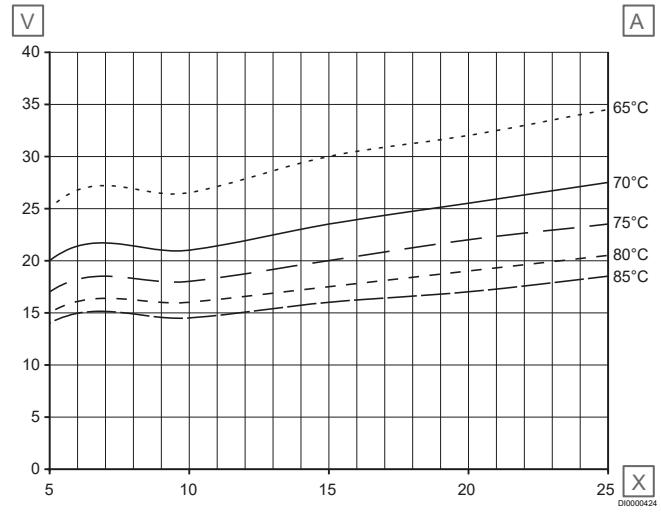

Item	Description
X	Tapping capacity [l/min]
Y	Primary heating demand [l/h], max. 1000 l/h
V	Return temperature [°C]
A	Primary heating supply temperatures
B	Max range

Uponor GmbH

Industriestraße 56,
D-97437 Hassfurt, Germany

1239540 v2_10_2026
GF / SKA

Uponor reserves the right to change the product portfolio and the related documentation without prior notification, in line with its policy of continuous improvement and development.

www.uponor.com