JRGURED Combi
domestic water station



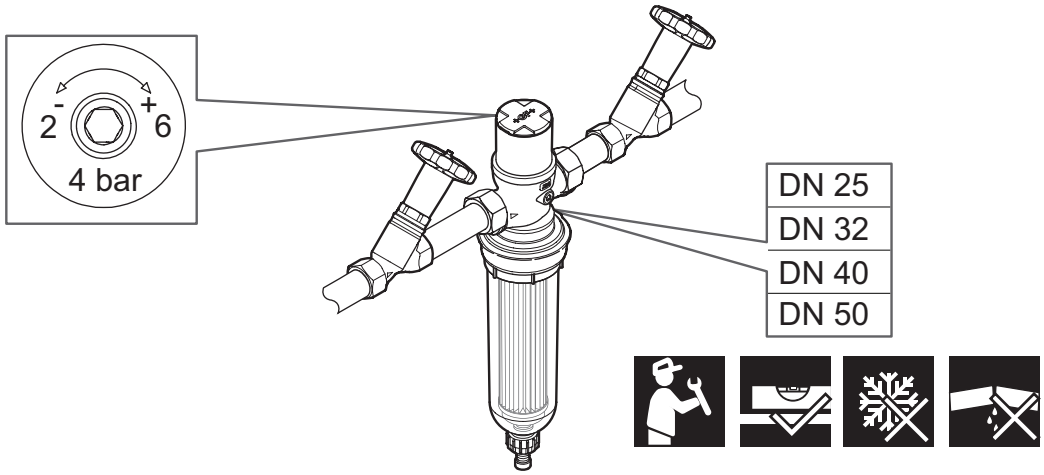

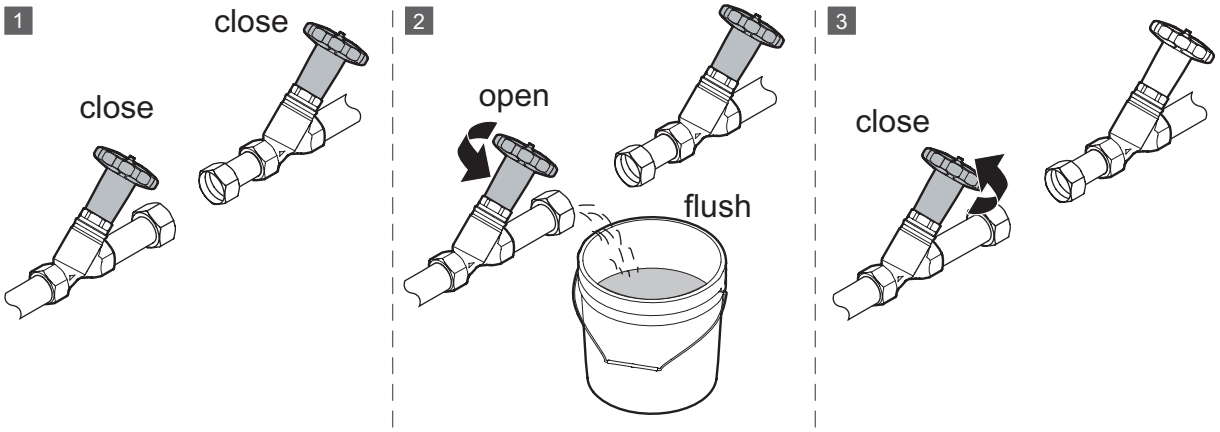

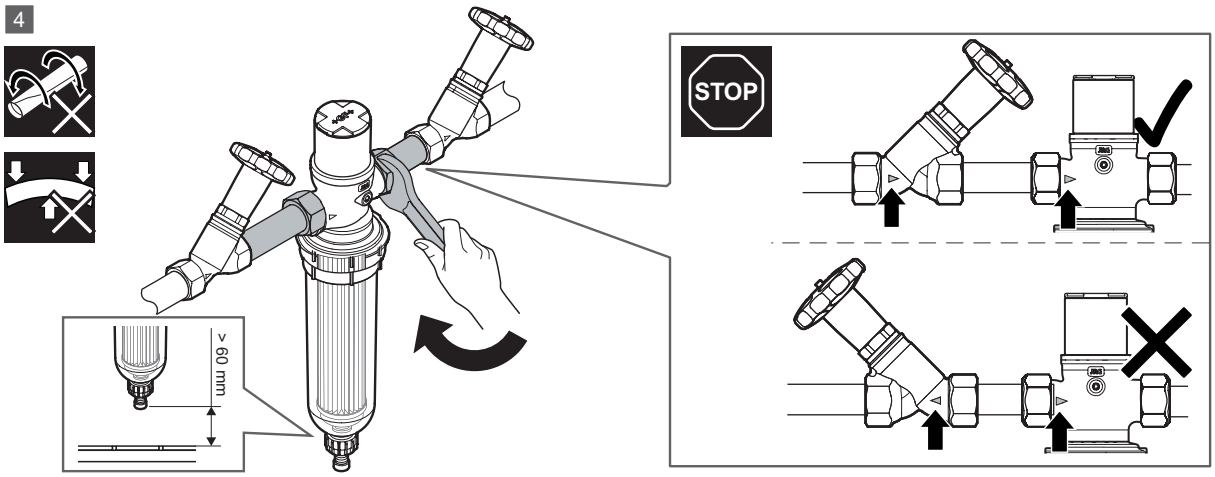

5

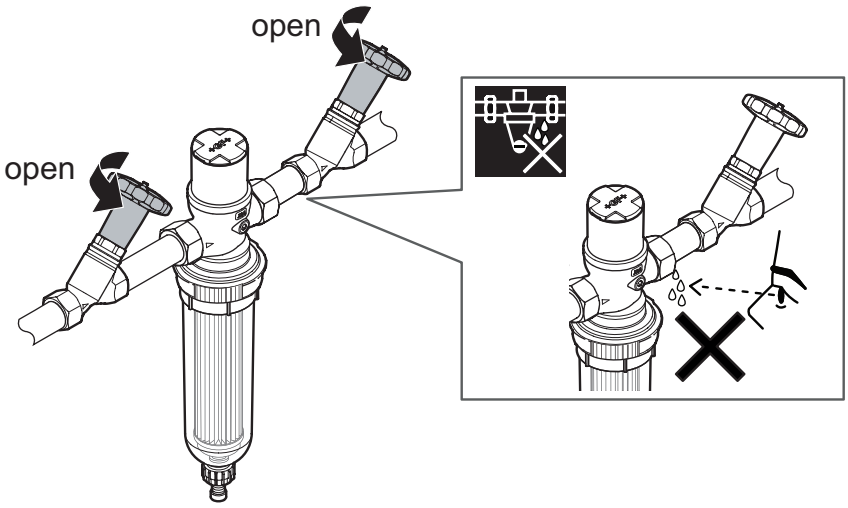
open
open

1

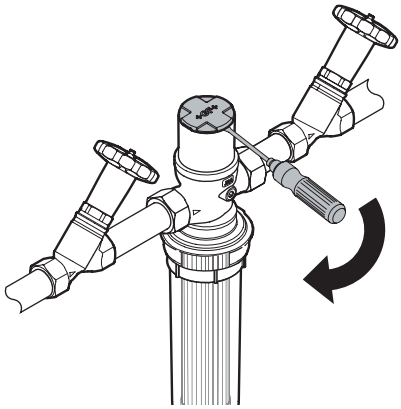

2

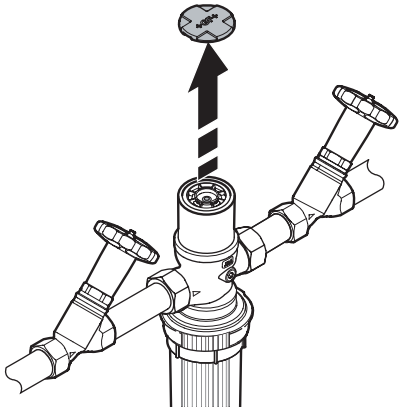

3

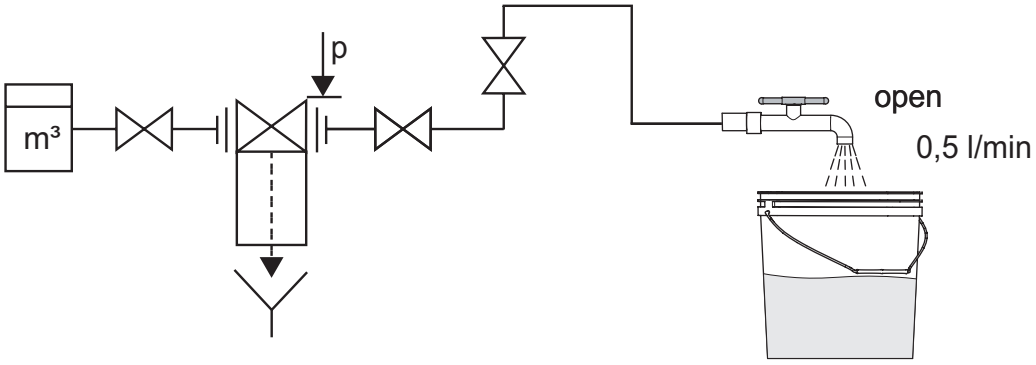
p
m³
open
0,5 l/min

4

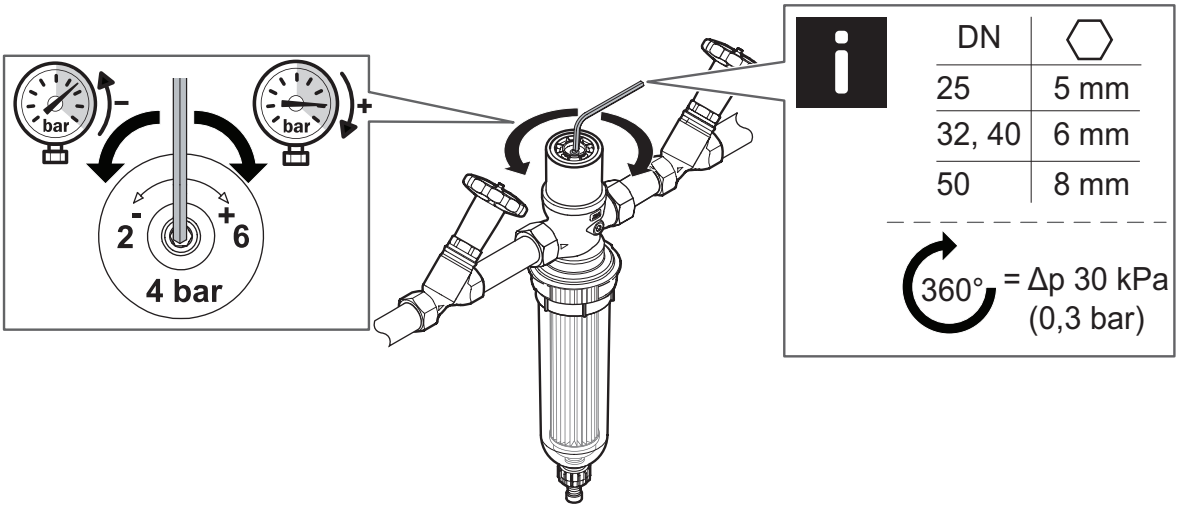
bar
bar
2
6
4 bar
DN
25
5 mm
32, 40
6 mm
50
8 mm
360°
= Δp 30 kPa
(0,3 bar)

5

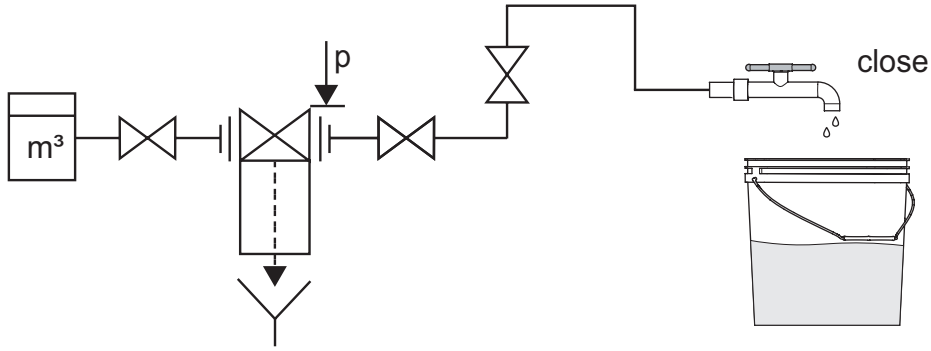
p
m³
close

6

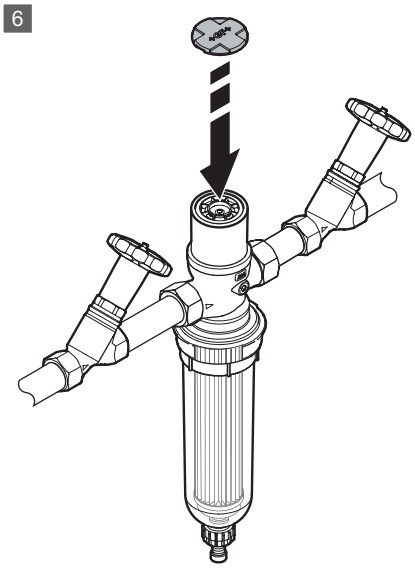

7

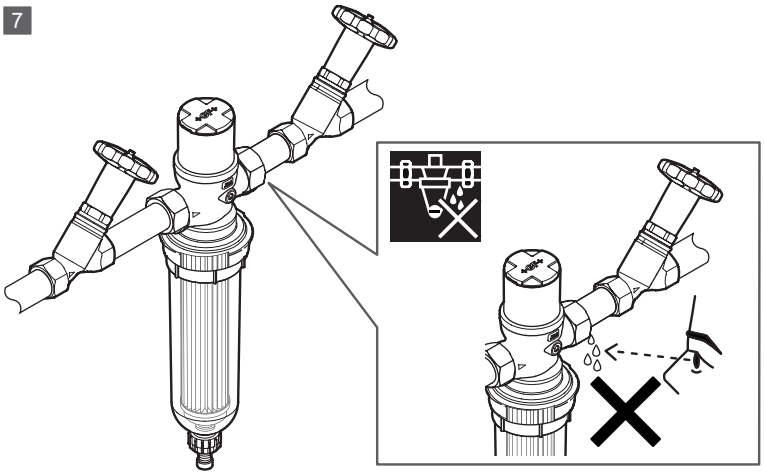

1

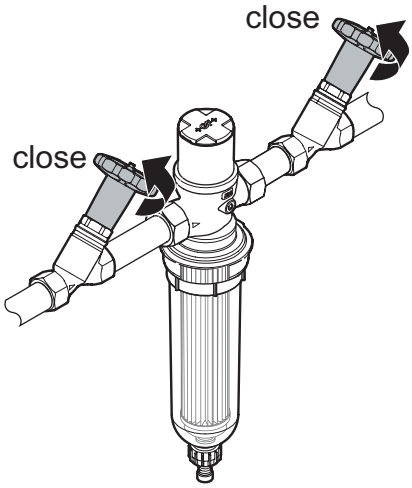
close
close

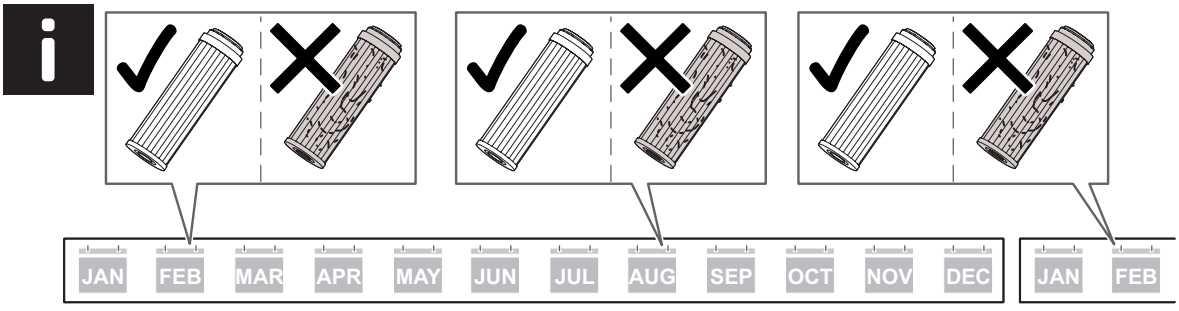
JAN
FEB
MAR
APR
MAY
JUN
JUL
AUG
SEP
OCT
NOV
DEC
JAN
FEB



2

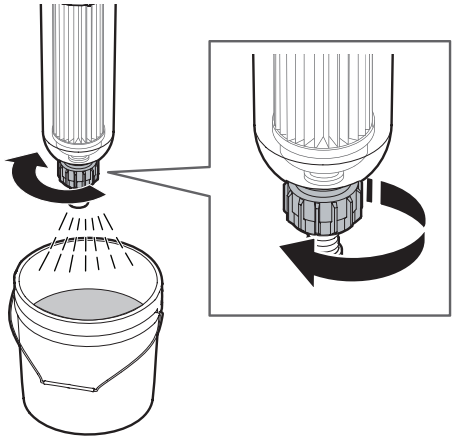

3

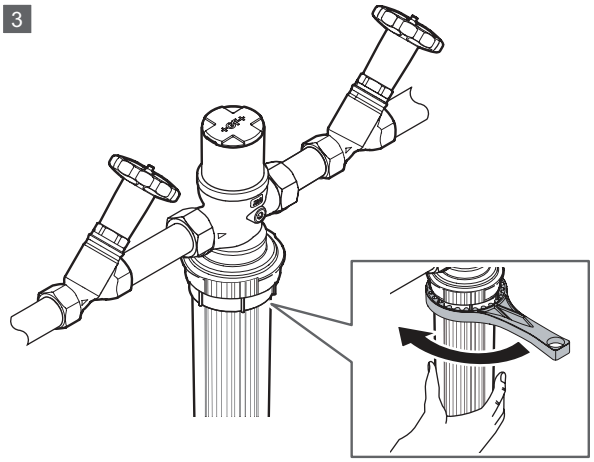

4

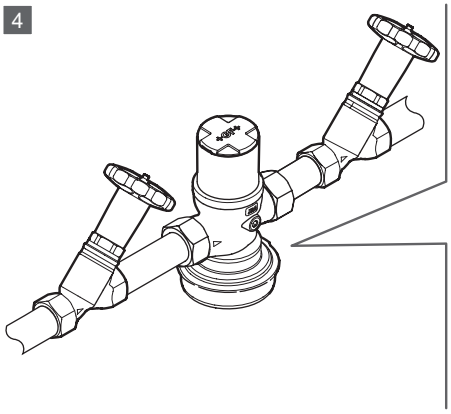

4.1

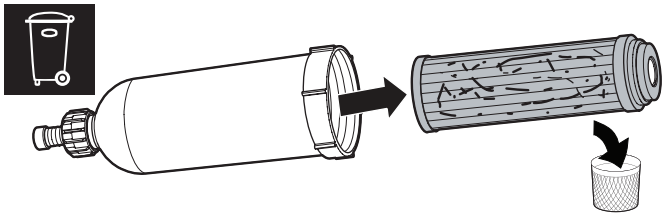

4.2

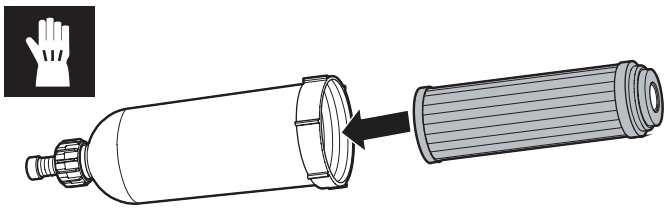

5

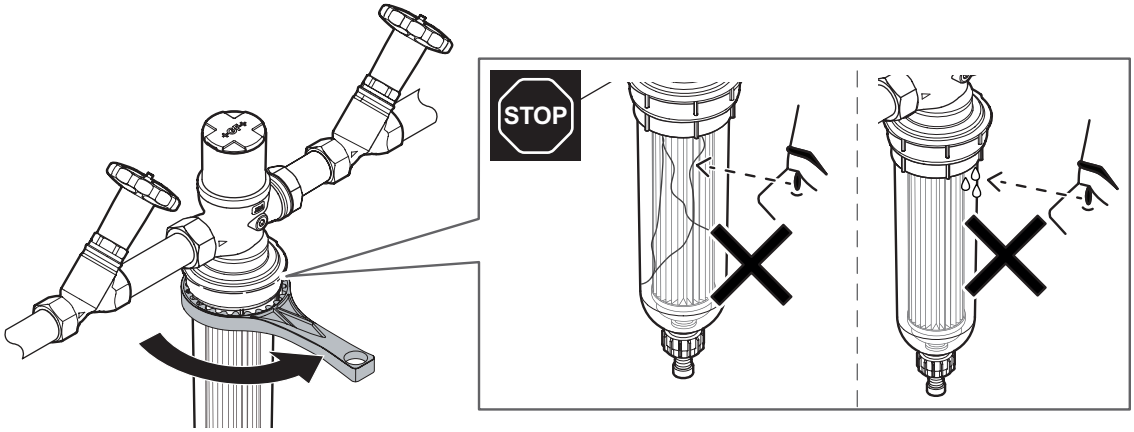

6

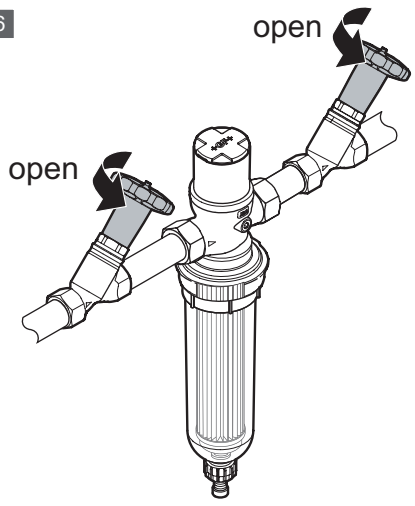


ERROR

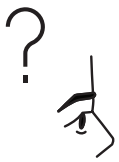
?

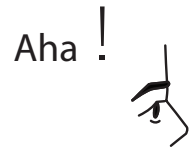
Aha !

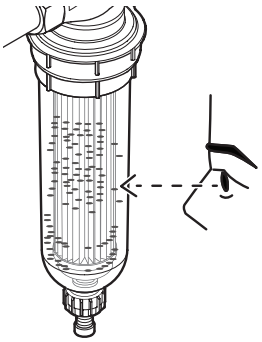

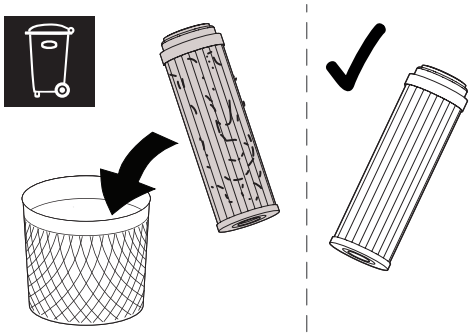



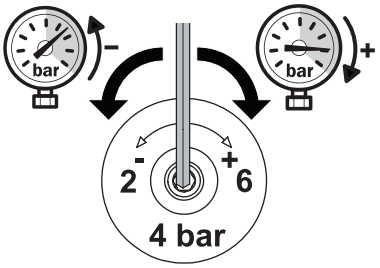
bar
bar
2
6
4 bar

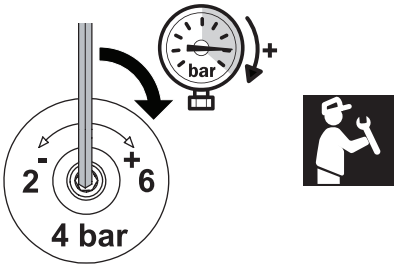
bar
2
6
4 bar

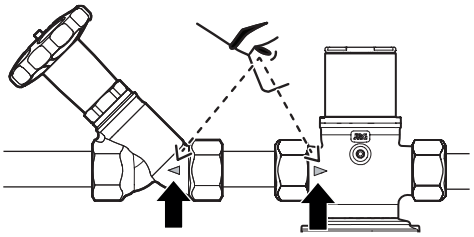

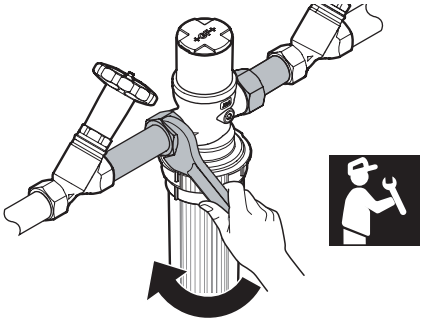



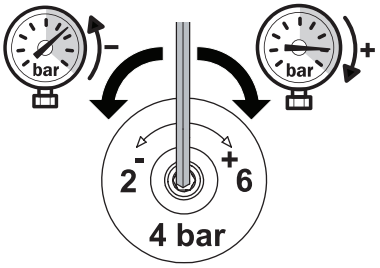
bar
bar
2
6
4 bar

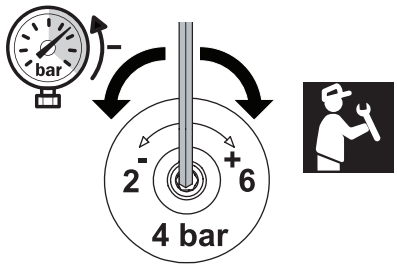
bar
2
6
4 bar

	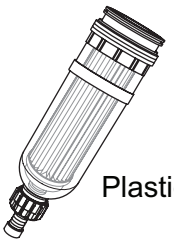 Plastic	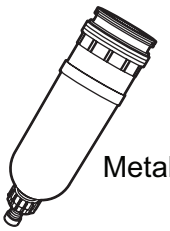 Metal
 medium	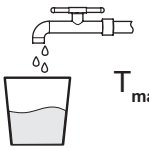 T_{max} = 30°C	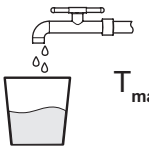 T_{max} = 70°C
DN	25, 32, 40, 50	
 P 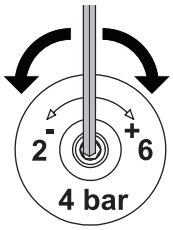	4 bar / 400 kPa (2 - 6 bar / 200 - 600 kPa)	
 P_{min}	2 bar / 200 kPa	
 PN	16 bar / 1600 kPa	25 bar / 2500 kPa
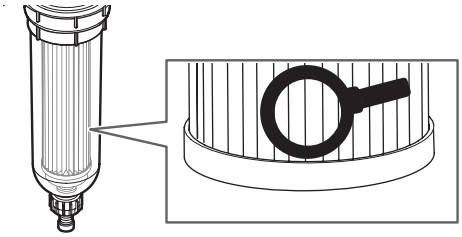	100 µm	

Georg Fischer JRG AG

Hauptstrasse 130
CH-4450 Sissach

350 945 919 ©Georg Fischer AG

1244919 v1_07_2026
GF / JLI_ASP

Uponor reserves the right to make changes, without prior notification, to the specification of incorporated components in line with its policy of continuous improvement and development.

www.uponor.com