Uponor Uni Pipe and S-Press system
14–110 mm

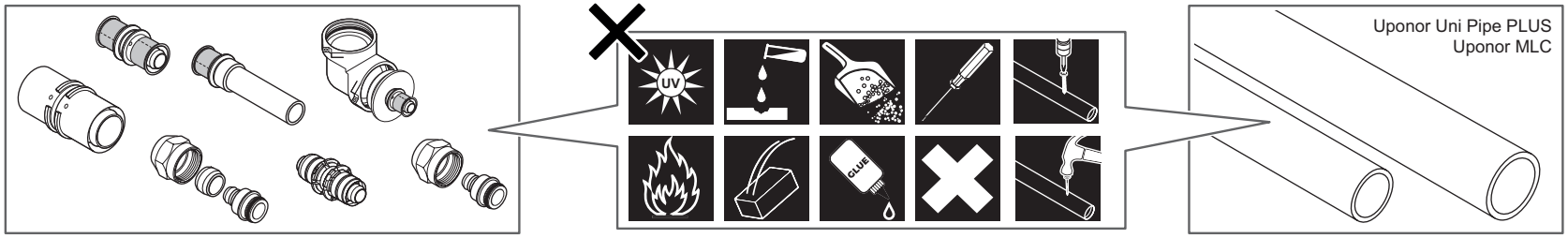

A

Ø14 - Ø25 mm

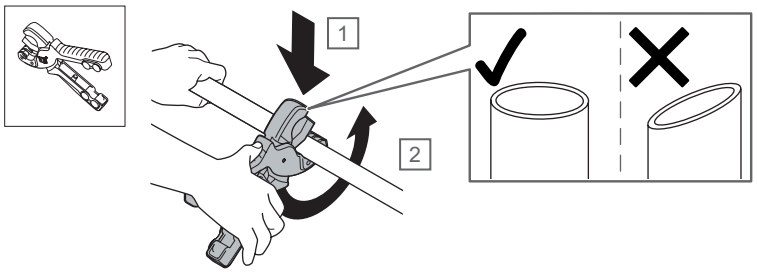

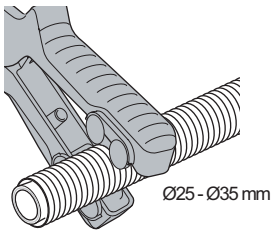

B

Ø25 - Ø63 mm, Ø50 - Ø110 mm

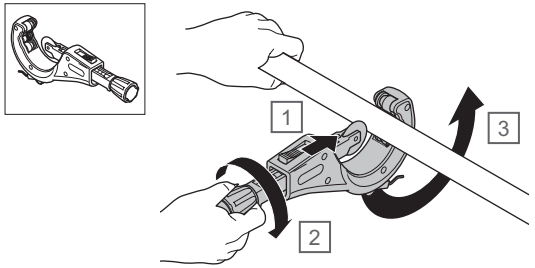

C

Ø63 - Ø110 mm

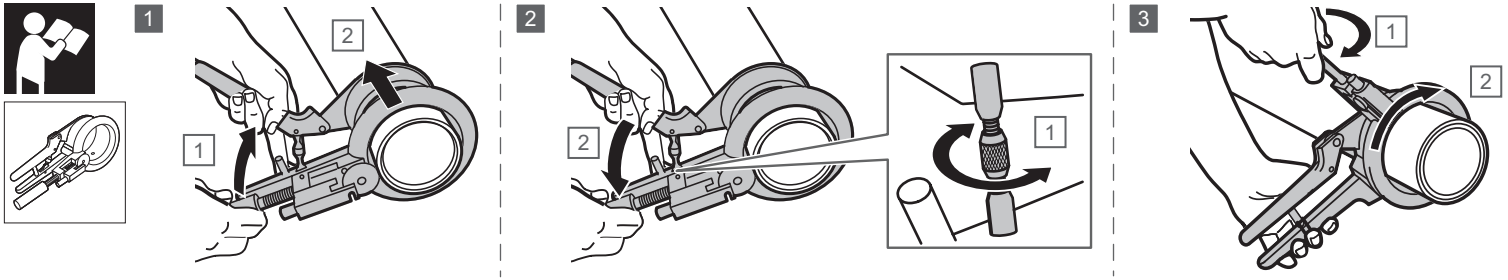

A

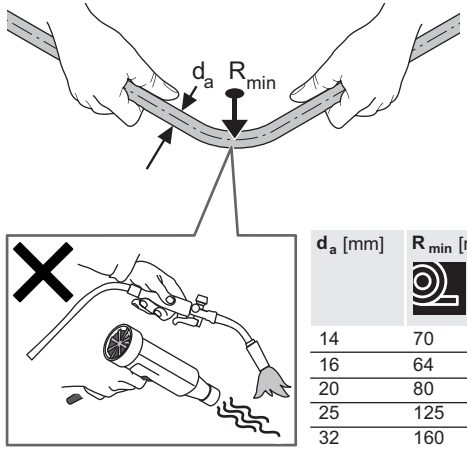

d_a [mm]	R_{min} [mm]	
14	70	–
16	64	64
20	80	80
25	125	125
32	160	–

B

Ø14 - Ø32 mm

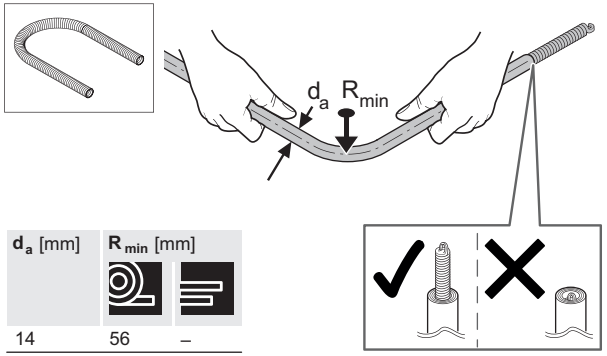

d_a [mm]	R_{min} [mm]	
14	56	–
16	48	48
20	60	60
25	75	75
32	96	–

C

Ø14 - Ø25 mm

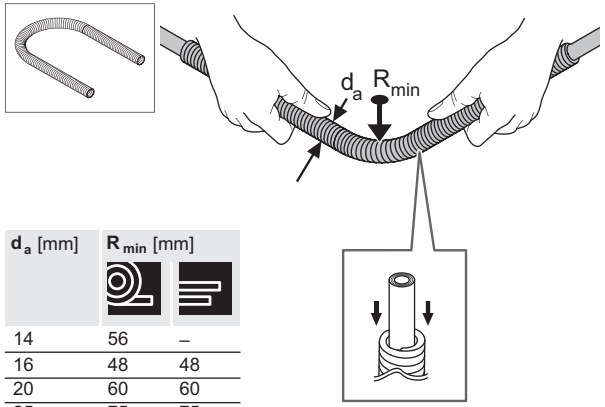

d_a [mm]	R_{min} [mm]	
14	56	–
16	48	48
20	60	60
25	75	75

D

Ø16 - Ø32 mm

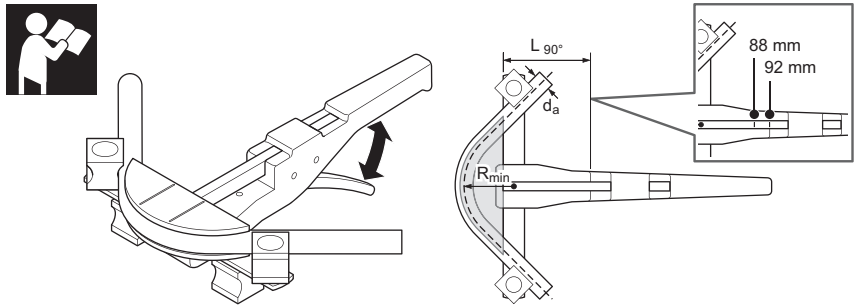

d_a [mm]	R_{min} [mm]		$L_{90°}$ [mm]
16	32	32	92
20	40	40	88
25	62,5	62,5	92
32	80	80	88

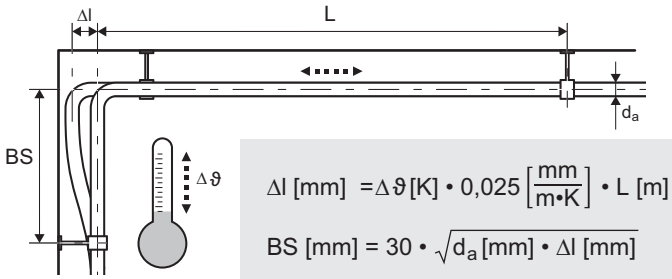

$$\Delta l\,[mm] = \Delta\vartheta\,[K] \cdot 0{,}025 \left[\frac{mm}{m \cdot K}\right] \cdot L\,[m]$$

$$BS\,[mm] = 30 \cdot \sqrt{d_a\,[mm] \cdot \Delta l\,[mm]}$$

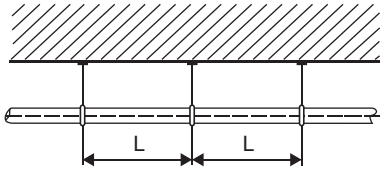

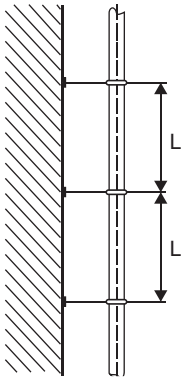

Pipe dimension d_a x s [mm]	Maximum fastening distance between the pipe clamps L [m]		
	horizontal		vertical
	Coil	Bar	
14 × 2,0	1,20	-	1,70
16 × 2,0	1,20	2,00	2,30
20 × 2,25	1,30	2,30	2,60
25 × 2,5	1,50	2,60	3,00
32 × 3,0	1,60	2,60	3,00
40 × 4,0	-	2,00	2,20
50 × 4,5	-	2,00	2,60
63 × 6,0	-	2,20	2,85
75 × 7,5	-	2,40	3,10
90 × 8,5	-	2,40	3,10
110 × 10,0	-	2,40	3,10

Coil

Bar

A

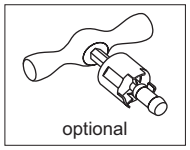

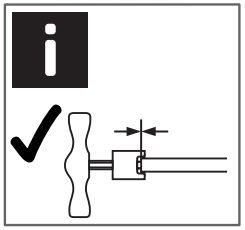

S-Press PLUS
S-Press PLUS PPSU

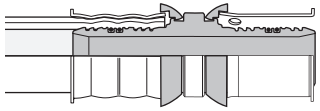

Ø16 - Ø32 mm

S-Press

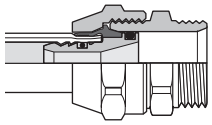

Ø14 - Ø32 mm

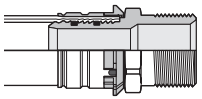

Ø14 - Ø25 mm

B

Ø40 - Ø110 mm

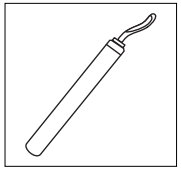

1

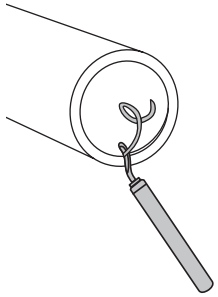

2

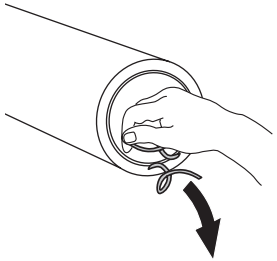

3

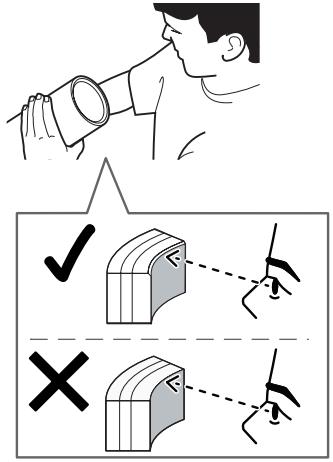

Ø14 - Ø32 mm

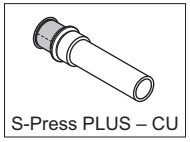

S-Press PLUS – CU

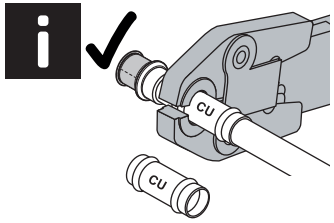

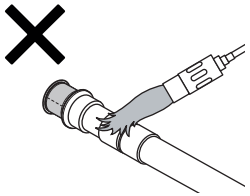

S-Press PLUS - M+V

1

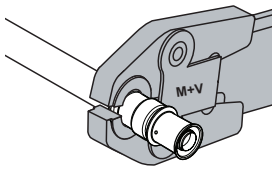

2

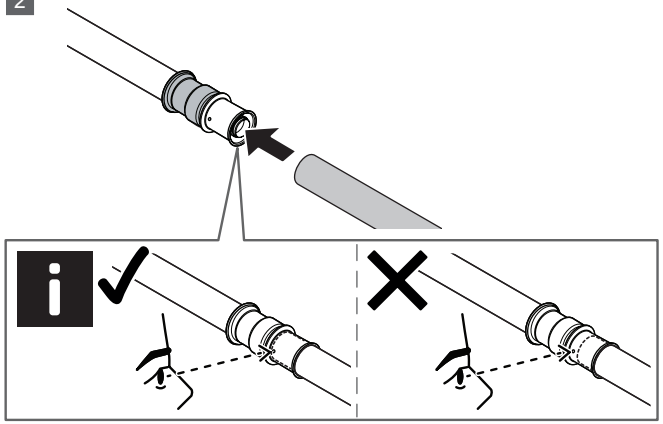

3

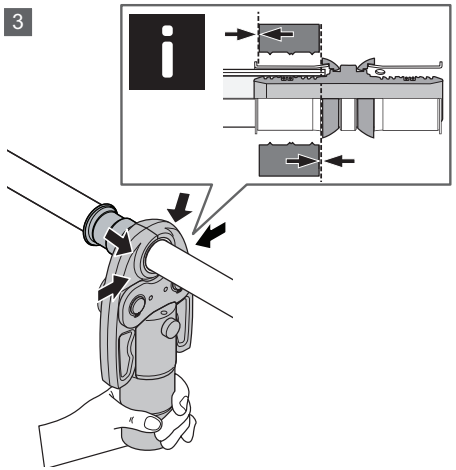

4

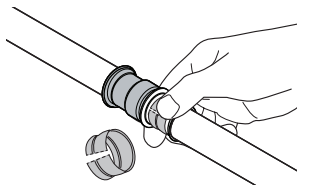

5

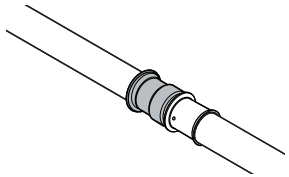

		UP110 UP75		UP75 EL	Mini2 Mini	
		UPP1	UPP1			
S-Press PLUS S-Press PLUS PPSU	16 – 20	16 – 32	–	–	16 – 32	–
S-Press	14 – 20	14 – 32	–	–	14 – 32	–
S-Press S-Press PPSU	–	–	40 – 50	63 – 75	–	–
RS	–	16 – 32	40 – 50	63 – 110	16 – 32	–
Uni	–	–	–	–	–	14 – 25

Ø16 - Ø32 mm

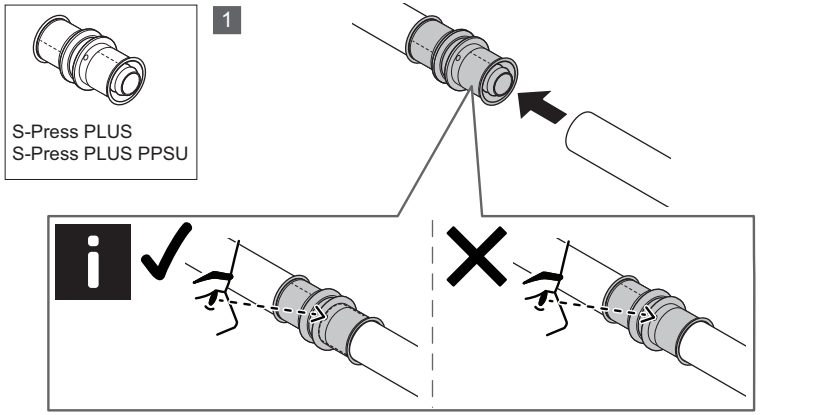

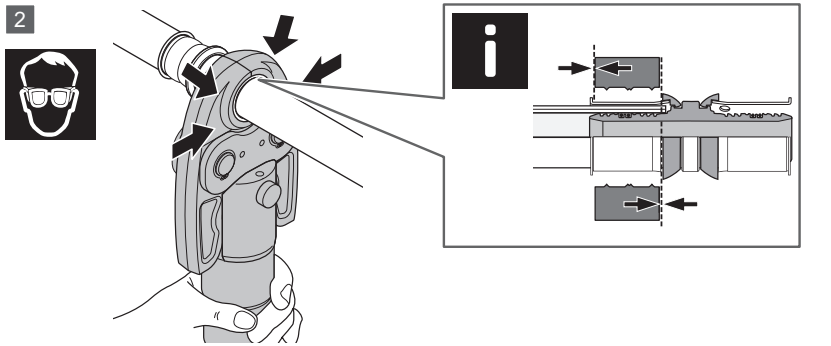

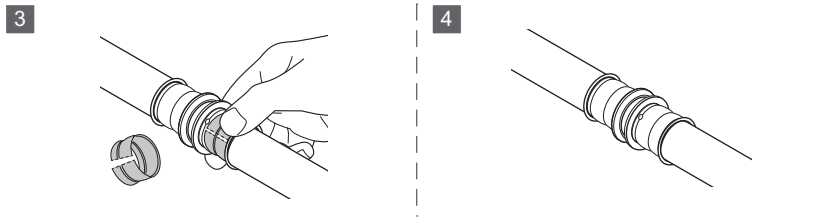

Ø40 - Ø50 mm

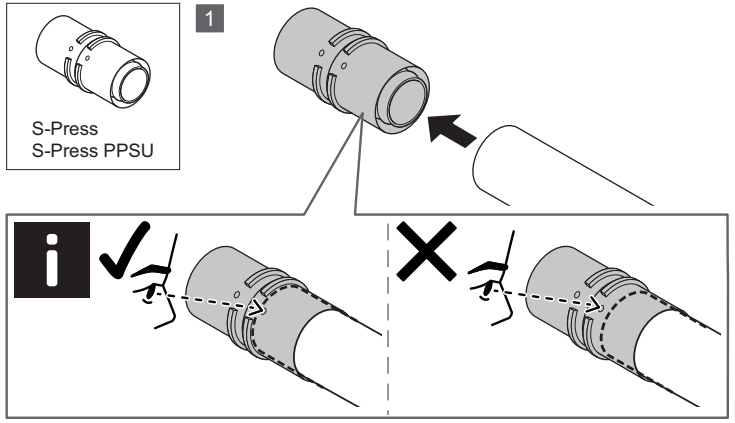

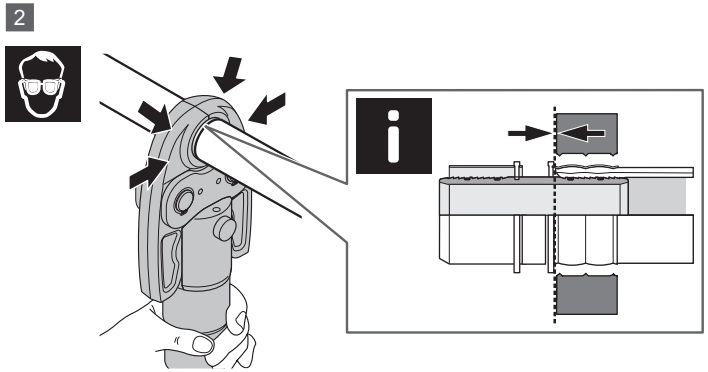

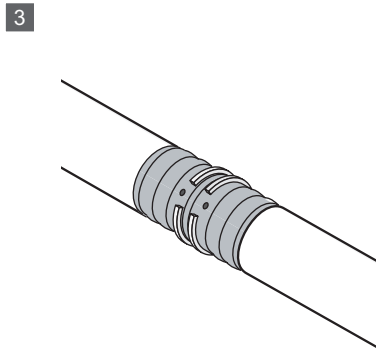

Ø63 - Ø75 mm

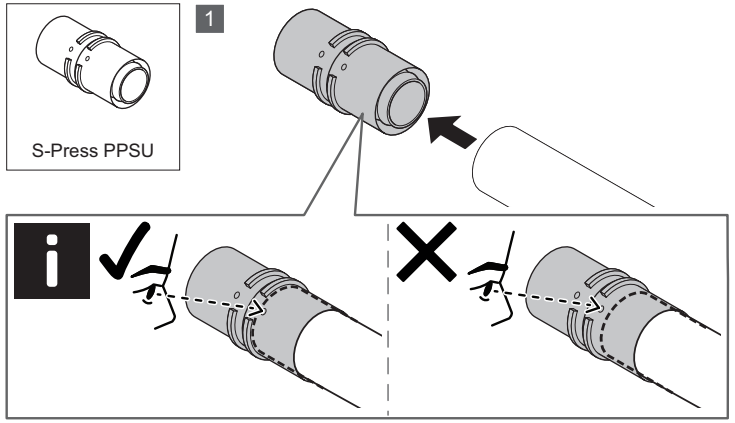

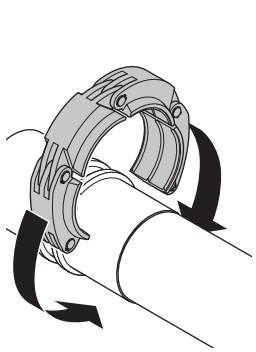

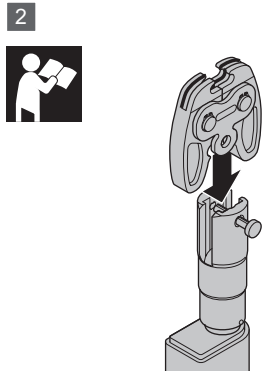

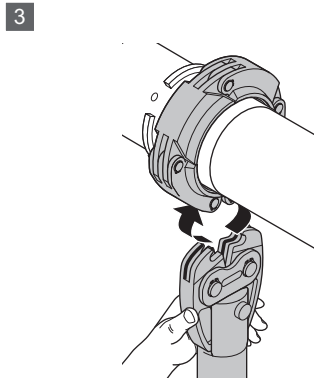

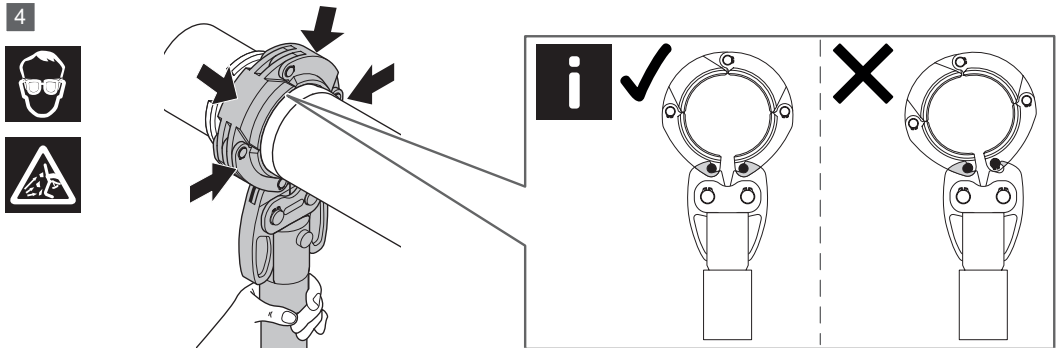

Ø63 - Ø110 mm

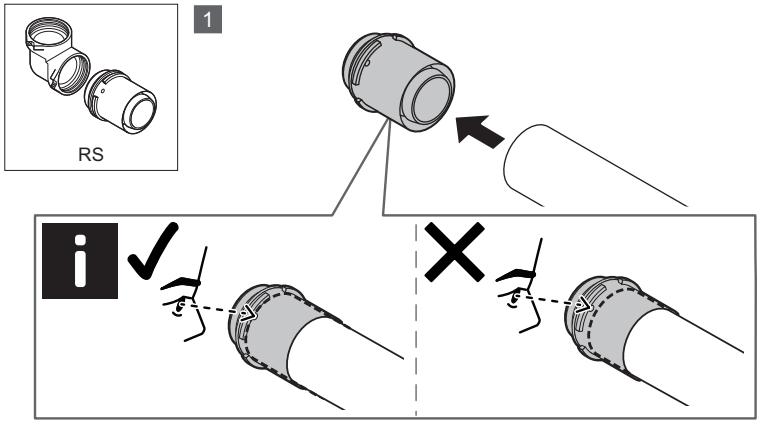

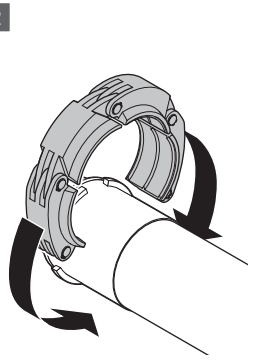

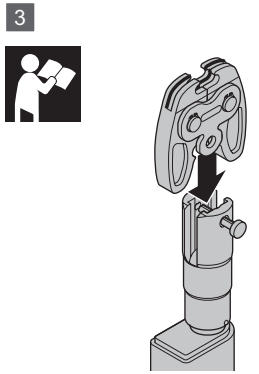

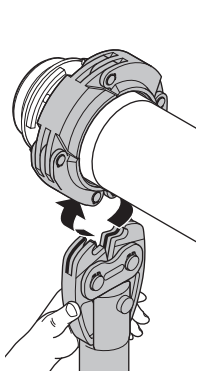

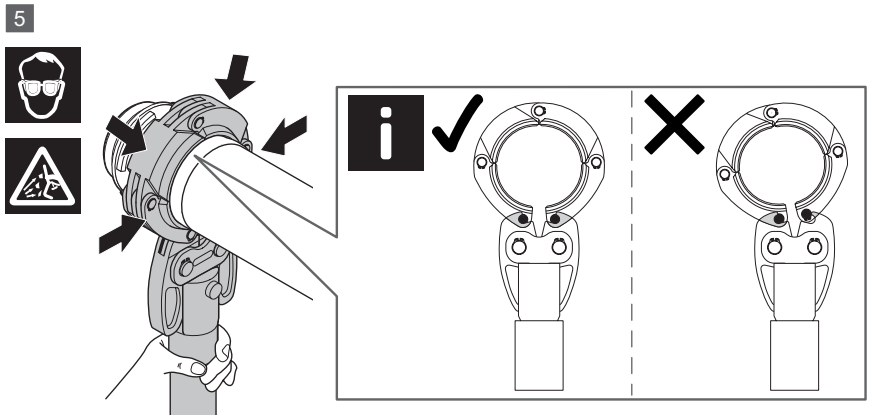

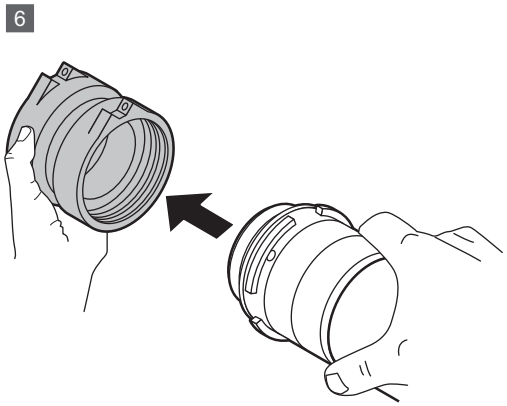

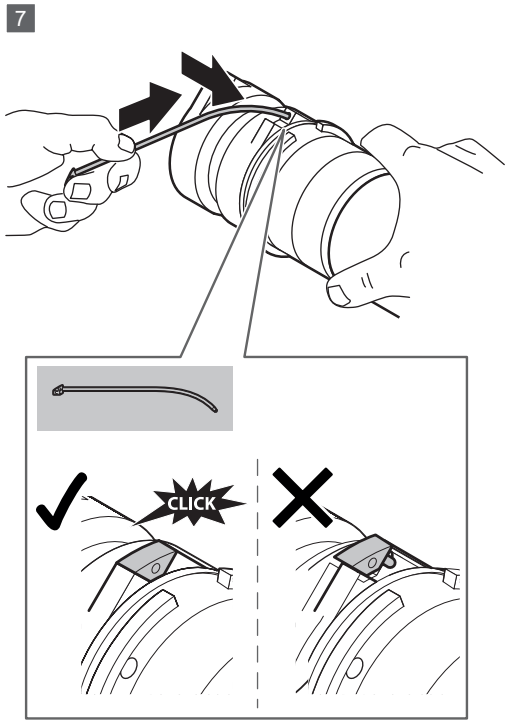

Ø14 - Ø32 mm

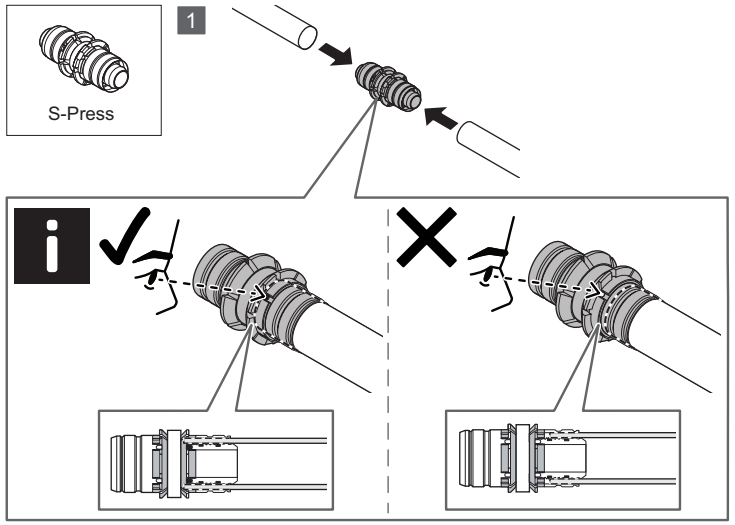

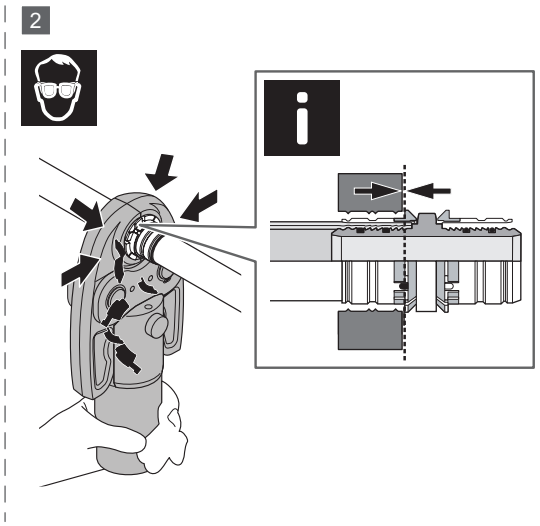

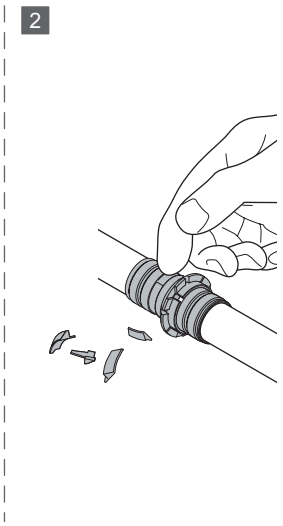

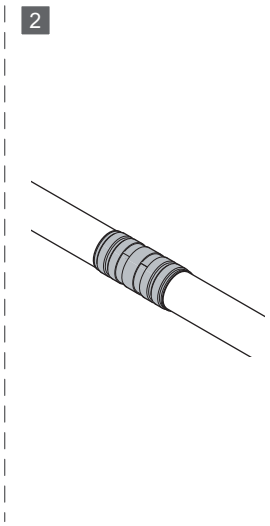

Ø14 - Ø25 mm

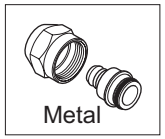

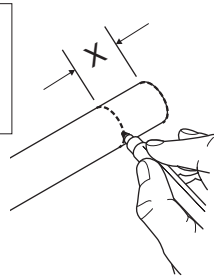

Fitting Dim.	X [mm]
14 – ½"	8
16 – ½"	8
20 – ½"	10

Fitting Dim.	X [mm]
14 – ¾"	10
16 – ¾"	10
20 – ¾"	10
25 – ¾"	11

Fitting Dim. [mm]	X [mm]
NL 14 – 15	8
NL 16 – 15	8
NL 20 – 22	10
NL 25 – 22	14

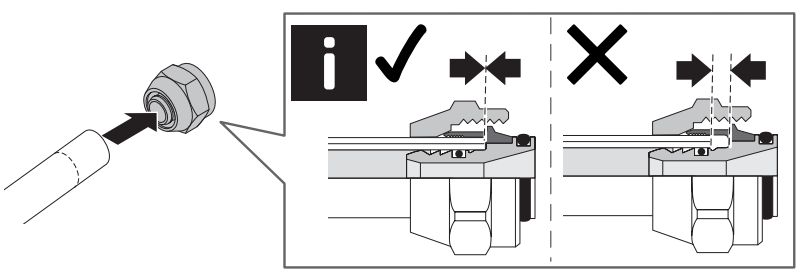

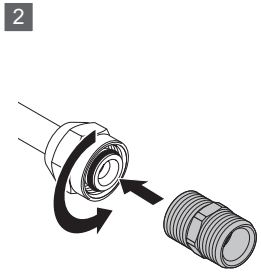

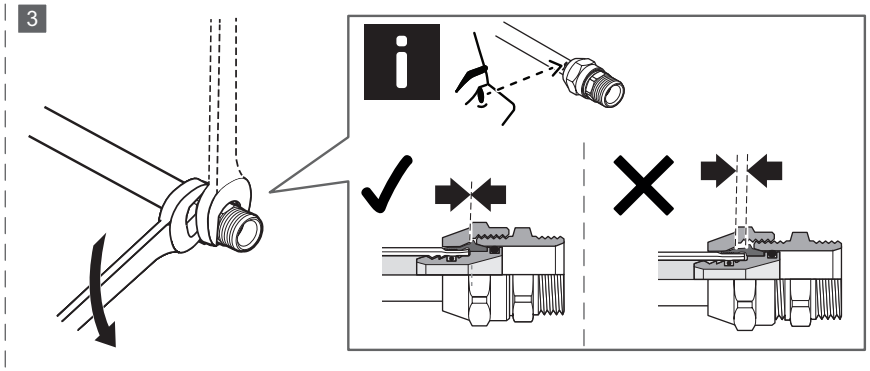

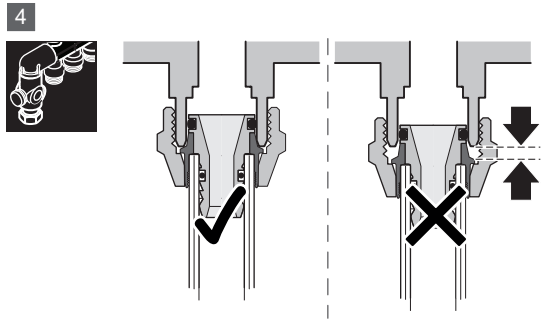

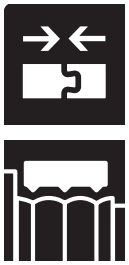

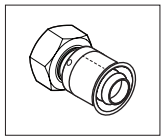

Fitting Dim.	Fitting Dim.
16 – ½" FT Uni-C	16 – ¾" FT Euro
20 – ½" FT Uni-C	20 – ¾" FT Euro

Fitting Dim.	Fitting Dim.
16 – ½" FT (SW)	16 – M22
16 – ½" FT 15mm	20 – M22

1

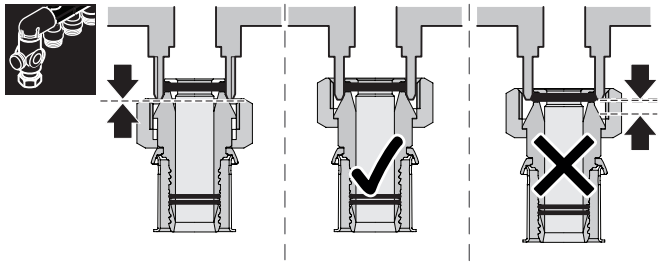

2

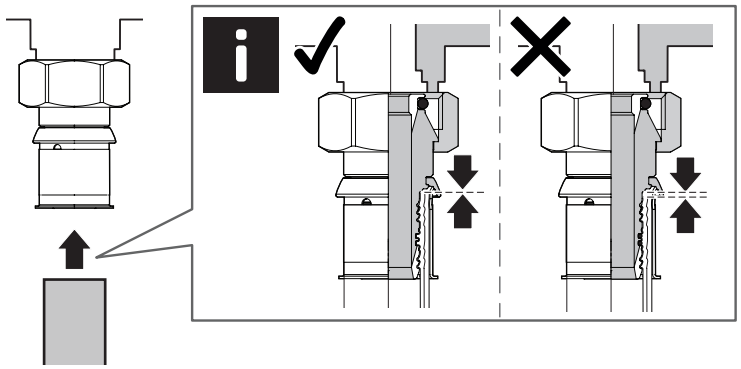

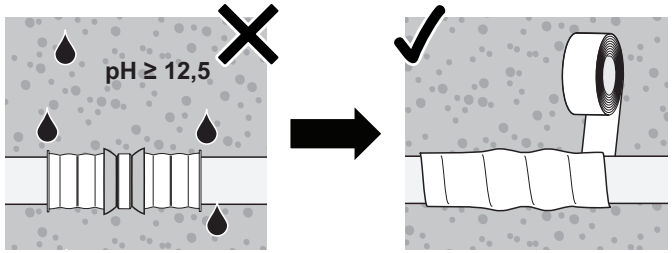

Uponor GmbH
Industriestraße 56,
D-97437 Hassfurt, Germany

1239731 v1_05_2026
GF / SKA

Uponor reserves the right to make changes, without prior notification, to the specification of incorporated components in line with its policy of continuous improvement and development.

www.uponor.com